PRELIMINARY
HYDROLOGY AND HYDRAULIC STUDY

FOR:

BEAUMONT POINTE

CITY OF BEAUMONT,
COUNTY OF RIVERSIDE, CALIFORNIA

PREPARED FOR:

JRT BP 1 LLC

18032 LEMON DRIVE, SUITE 367
YORBA LINDA, CA. 92886
PHONE: (714) 299-8549

PREPARED BY:

PROACTIVE ENGINEERING CONSULTANTS WEST, INC.

27404 VIA INDUSTRIA, 2ND FLOOR
TEMECULA, CA 92590
PHONE: (951) 200-6840

FEBRUARY 2023

Table of Contents

SECTIONS

Section 1: Project Narrative 3

Section 2: Hydrological Calculation Methodology 5

Section 3: Hydraulic Calculations 9

Section 4: Vicinity Map 13

APPENDICES

Riverside County Flood Control District Plates & References ..... A

- NCRS Web Soil Survey Hydrological Soils Group Map
- NOAA Atlas 14 Rainfall Data for Beaumont
- Slope of Intensity Duration Curve (Plate D-4.6)

Existing Hydrology Models and Results ..... B

Developed Hydrology Models and Results C

Existing Culvert Hydraulic Analysis ..... D

Developed Unit Hydrograph Analysis ..... E

Santa Ana River Watershed BMP Sizing Calculations ..... F

Hydrology Key Maps ..... G

- Existing Hydrology Key Map
- Developed Hydrology Key Map
- Developed Unit Hydrograph Key Map

References ..... H

Section 1: Project Narrative

The Beaumont Pointe Specific Plan project is approximately 539.9 acres where roughly 276.4 acres will be developed for commercial and warehousing with paved parking. The project also includes a portion dedicated to future retail development located at the most eastern edge of the property. The project is located within the County of Riverside on the western border of the City of Beaumont on the southeast side along the frontage of 60 Freeway. The project will have access from the future extension of 4th Street from the adjected development on the western property line.

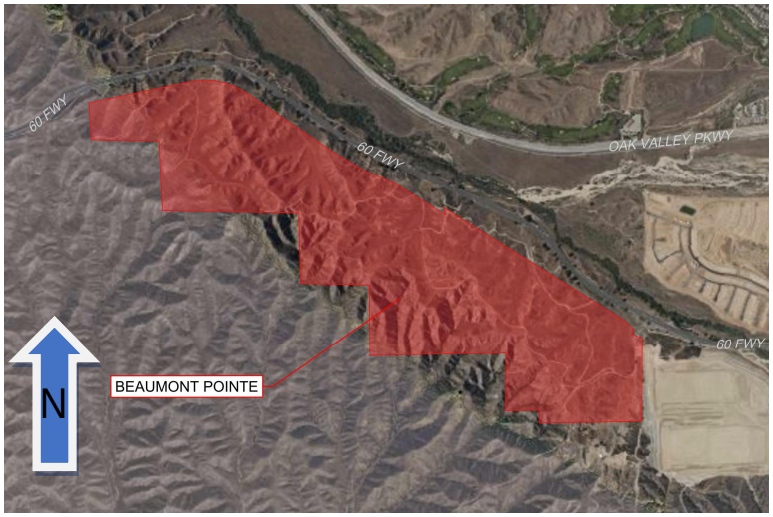

Figure 1: Vicinity Map

EXISTING DRAINAGE CONDITION:

The project site is currently on undeveloped open space between the 60 Freeway and the northern edge of the foothills of the Badlands. The property is located within FEMA Zone X per FRIM panels 0785G and 0795H. All the runoff from the property drains north towards the 60 Freeway to 16 existing Caltrans culverts (1-16) via their respective tributary areas (drainage areas 100 thru 1600) as depicted in the Existing Hydrology Key Map in Appendix F. The pre-developed tributaries include the offsite areas in between the south edge property lines and the ridgelines along the adjacent hillsides. The runoff from these tributaries is detained in the natural detention areas located adjacent culvert inlets. All the culverts ultimately discharge into San Timoteo Creek that flows northwest along the 60 Freeway. Table 1 summarizes the existing hydrology analysis for the 16 tributaries along with their respective culvert sizes and calculated capacities.

PROPOSED DRAINAGE DESIGN CONCEPT:

The proposed development maintains the 16 existing culverts (1-16) as the discharge points apart from the first two culvert (1 and 2). Culverts 1 and 2 are to be abandoned in place and proposed 20'x20' reinforced concrete box (RCB) to be installed west of culvert 1 as part of the improvements Caltrans is constructing on the 60 Freeway. Portions of the Caltrans freeway widening plan can be found in Appendix H.

The runoff from the developed site will be intercepted by a proposed onsite drainage system which routes the runoff to four stormwater treatment basins where the water is detained and treated in accordance with the Riverside County *LID BMP Design Manual* for the Santa Ana River Watershed requirements. Runoff is then discharged into their respective culvert tributaries. The entire proposed storm water management system will be located within the property boundaries. Table 2 summarizes the developed hydrology analysis for Areas 1 through 16. The developed hydrology key map can be found in Appendix G.

The proposed stormwater treatment basins will provide peak runoff mitigation before discharging to the culverts. All basins outlet into the natural drainage areas upstream of their culverts where the water continues to be naturally detained and mitigated before converging with San Timoteo Creek. A summary of the basin detention volumes Basins 1 through 4 can be found in Appendix F.

For the future commercial Parcels 1 and 2, also referred to Planning Areas 1 and 2, will be mass graded and utilize temporary sediment basins until they are fully developed with permanent fixtures in the future. Per this study, outlet structures that connect to the backbone storm drain lines have been provided to these parcels and have been sized for an assumed land use and impervious fraction for commercial use. However, the future developer of these parcels will need to provide the final mitigation basins and BMP solutions that best works with the proposed site plan.

STORMWATER TREATMENT:

Treatment of first flush waters from the commercial and warehouse parcels will be accomplished through four proposed BMP basins (Basin 1 thru Basin 4). Future soil percolation and infiltration tests will need to be conducted to determine the BMP basin type and to verify if infiltration basins will be feasible for this project. The proposed BMP basins will be consistent with Riverside County Stormwater Quality Best Management Practice Design Handbook. See Appendix F for the Santa Ana Watershed BMP Basin worksheet for the basin design summary.

Parcels 1 and 2 will implement SE-2 sediment basins per the CASQA California Stormwater BMP Handbook Construction. These basins will be implemented in the interim graded condition until the final site plan and design is approved. Preliminary sizing calculations for sediment basins were prepared but final sediment basin sizing shall be included with the erosion control plans.

DESIGN ASSUMPTIONS:

A. Hydrologic soil groups were obtained from NRCS Web Soil Survey Hydrological Soils Group Map (see Appendix A for Soil Survey results). A future geotechnical soils report will be crossed referenced to confirm the hydrological soils groups for the project.

B. Antecedent moisture condition AMC 2 (moderately moist) was used for all calculations.

C. The standard intensity-duration curve (RCFC & WCD Hydrology Manual Plate D-4.6) for 'Beaumont Area' was used.

D. Precipitation values for the 10-year and 100-year, 1-hour events were acquired from NOAA Atlas 14.

Section 2: Hydrological Calculation Methodology

RATIONAL METHOD ANALYSIS & MODELING:

The Modified Rational Method hydrology analysis for this study is based upon "Riverside County Flood Control and Water Conservation District Hydrology Manual", dated April 1978. Software designed by "CivilDESIGN" of San Bernardino was used to solve the drainage models of the site. The output is printed in the Standard Riverside County format.

1. Rainfall:

   The computer software stores a rainfall database corresponding to Plate D-4.1 that provides all the required time vs. intensity data for Riverside County.

2. Infiltration:

   Soil type was based on soils group map from NRSC Web Soil Survey. The computer software then uses Plates D-5.1 through D-5.8 as applicable.

3. Runoff and Routing:

   After the "C" value is determined, the computer software determines the runoff and routes the flood downstream based on the input model and Plates D-7 through D-9 as necessary.

The following tables summarizes the existing hydrology analysis for the property for the 100-year storm event. The software output files for the models can be found in Appendix B. Per the NRSC Web Soil Survey, the hydrologic soil groups A, B, C, and D were present onsite and mapped. For each subarea the soil cover was calculated as a percentage of which was utilized to calculate the runoff index. The rational method calculates the weighted runoff coefficient for each subarea and determines the average runoff index to be later implemented in unit hydrograph models. Details for the method for calculating the hydraulic capacities for the culverts can be found in Section 3 and Appendix D. Where runoff exceeds the calculated culvert capacity, the excess runoff ponds within the natural detention areas adjacent to the culvert invert. For Area 1100 and culvert 11, the approximate natural detention area is 18.4 ac-ft. For Area 1300 and culvert 13, the approximate natural detention area is 15.8 ac-ft. Areas 600 and 900 have an estimated natural detention capacity of 10.18 ac-ft and 12.06 ac-ft. respectfully.

Table 1: Existing Rational Method Analysis & Culvert Capacity

Pre-Developed Drainage Area ID	Pre-Developed Area (AC.)	Q_{100} (CFS)	Time of Concentration (minutes)	Average Runoff Coefficient (RI)	Culvert ID	Culvert Size	Culvert Capacity, Calculated (CFS)
100	140.1	376.7	14.8	78.8	1	*54" CMP	**483.4
200	2.6	9.0	9.1	72.3	2	*30" CMP	
300	9.3	28.4	11.6	75.1	3	30" CMP	96.0
400	16.9	54.5	11.2	75.2	4	36" CMP	154.1
450	0.4	1.8	5.0	78.0	Not Applicable	Not Applicable	Not Applicable
500	5.4	16.4	12.1	75.9	5	30" CMP	71.8
600	53.9	160.5	12.8	74.6	6	42" CMP	132.0
700	4.4	14.3	10.6	76.2	7	24" CMP	59.5
800	7.0	22.6	10.7	76.5	8	24" CMP	51.5
900	14.1	49.7	9.2	76.2	9	24" CMP	38.7
1000	0.5	2.2	5.2	78.0	10	24" CMP	77.8
1100	79.1	212.6	16.2	75.8	11	48" CMP	79.2
1200	3.0	10.5	8.8	73.9	12	24" CMP	54.1
1300	65.7	191.2	13.6	74.8	13	36" CMP	138.8
1400	4.7	8.7	30.3	75.7	14	36" CMP	118.6
1500	25.8	88.4	9.7	75.1	15	36" CMP	119.6
1600	90.5	234.7	17.0	75.1	16	2-48" CMP	476.9
Total	523.4	1,482.2	30.3				

** Existing culverts with no available data to use to calculate the estimated capacity. Culvert capacity calculations can be found in Appendix D. Existing culverts to be replaced by a 20'x20' RCB per Caltrans 60 Freeway widening project. Culvert capacity calculations based on Caltrans drainage plans (slope & pipe size). See selected Caltrans Drainage plan sheets in Appendix H).*

*** Proposed 20'x20' RCB culvert capacity calculated with an assumed depth of 2 ft which is 10% of the total height of the culvert. The actual capacity of the culvert far exceeds the assumption and is a function of the depth of flow, however it is unlikely that the depth of flow will exceed 25% of the total height.*

The following tables summarize the developed hydrology analysis for the property for the 100-year storm event. The software output files for the models can be found in Appendix C. Details for the method for calculating the hydraulic capacities for the culverts can be found in section 3.

Table 2: Developed Rational Method Analysis

Developed Area ID	Developed Area (AC)	Q_{100} (CFS)	Time of Concentration (minutes)	Runoff Index (RI)	Basin ID	Culvert ID	Culvert Size	Culvert Capacity, Calculated (CFS)
1	177.4	428.1	19.1	69.2	Basin 4	1	*54" CMP	**483.4
2	2.6	9.0	9.2	72.3	N/A	2	*30" CMP	
3	7.0	21.0	12.0	74.0	N/A	3	30" CMP	96.0
4	6.7	21.6	10.3	73.8	N/A	4	36" CMP	154.1
45	0.4	1.8	5.0	78.0	N/A	N/A	Not Applicable	Not Applicable
5	5.1	15.6	11.4	74.8	N/A	5	30" CMP	71.8
6	43.9	114.2	11.2	60.6	Basin 3	6	42" CMP	132.0
7	4.2	15.2	8.6	76.1	N/A	7	24" CMP	59.5
8	5.2	16.9	10.3	75.9	N/A	8	24" CMP	51.5
9	9.6	31.3	10.0	69.8	N/A	9	24" CMP	38.7
10	0.5	2.1	6.0	78.0	N/A	10	24" CMP	77.8
11	12.1	36.7	12.2	74.6	N/A	11	48" CMP	79.2
12	2.9	10.2	9.0	74.0	N/A	12	24" CMP	54.1
†13	117.9	313.1	17.2	58.2	Basin 2	13	36" CMP	138.8
14	4.2	13.7	10.1	75.4	N/A	14	36" CMP	118.6
15	7.7	22.2	12.7	72.3	N/A	15	36" CMP	119.6
16	137.3	311.7	26.2	52.1	Basin 1	16	2-48" CMP	476.9
Total	544.9	1,379.5						

** Existing culverts with no available data to use to calculate the estimated capacity. Existing culverts to be replaced by a 20'x20' RCB per Caltrans 60 Freeway widening project. Culvert capacity calculations based on Caltrans drainage plans (slope & pipe size). See selected Caltrans Drainage plan sheets in Appendix H).*

*** Proposed 20'x20' RCB culvert capacity calculated with an assumed depth of 2 feet which is 10% of the total height of the culvert.*

† *Area 13's peak flow rate will be split between Area 11 and 13's culverts via a proposed junction structure with flow restriction storm gates. Details of diversion structure to be included with the final version of this study. Please see discussion below and in section 3: existing culvert analysis for runoff exceeding the calculated culvert capacity.*

Each culvert has an existing natural drainage detention area located before the upstream inlets. These areas will provide detention storage and peak flow mitigation for the increased flow rates that exceed the calculated culvert capacity.

Section 3: Hydraulic Calculations

EXISTING CULVERT ANALYSIS:

No previously prepared hydrology or hydraulic studies or design plans or design flow rates were found for the existing culverts. Therefore, the culvert capacities were estimated using the Manning's equation for gravity pipe flow utilizing field survey data to determine the size, material, and slope of the culverts. The capacities of the culverts were calculated using the civil design software *CivilCADD Version 2.1* under maximum open channel flow conditions (D/d = 0.938) based on survey shots taken at the upstream and downstream flowline elevations. A Manning's roughness coefficient 'n' of 0.015 typically used for CMP was assumed since the current field conditions of the culverts were not verified. The hydraulic calculation output files can be found in Appendix D.

These culverts may be able to accept more flow, however this will cause the runoff to pond upstream within their respective natural drainage areas. These natural detention areas will provide storage and flow mitigation for the increased runoff produced by the project site before routing through the existing culverts.

SYNTHETIC UNIT HYDROGRAPH METHOD:

The Synthetic Unit Hydrograph, a computational procedure for developing peak runoff and discharge for storms of a specified recurrence interval, was used to evaluate our detention and mitigation needs onsite. This procedure calculates effective rainfall, which is the portion of the total rainfall that appears as surface runoff, at a specific concentration point. Precipitation data for the project location was taken from NOAA Atlas 14 and are provided in Appendix 1 of this report. It should be noted that the peak runoff flowrates resulting from the unit hydrograph analysis will vary from the peak runoff from the Modified Rational Method due to the different methodology and calculations as well as the parameters based on the times of concentration and flow travel lengths. The different methods serve to help design and size specific elements of the proposed onsite storm drain system. The Modified Rational Method is utilized for designing and sizing inlet structures and storm drain pipes whereas the Unit Hydrograph Method is used to design the basins with the necessary capacity.

The 100-year storm frequencies for each of the 1-hour and 24-hour durations were analyzed for increased runoff mitigation.

The following assumptions/guidelines were applied in the use to the Synthetic Unit Hydrograph Method:

- The 100-Year point rainfall depths at 1 and 24-hour durations were obtained from NOAA Atlas 14.
- Lag times used for the development of the synthetic unit hydrograph were generated based on the size and shape of the sub basin. The watershed sub area lag times were calculated according to the lag time equation as indicated in the RCFC&WCD Hydrology Manual.
- The basin factor (Manning's 'N'-value) 0.030 was estimated based on field investigations and existing and planned development. For the developed condition models, a Manning's 'N'-value of 0.015 was used which.
- The Foothill S curve graph was used for this project site due to the existing ground slope which ranges from steep to flat (>30% to <0.5%). The 1 and 24-hour, 5-minute interval data was used.

These were derived from the RCFC & WCD Hydrology Manual and are applied to the unit hydrograph model within the CivilDesign Software.

- An area averaged infiltration rate was calculated based on hydrologic soil type, vegetative cover land use and impervious percentage. The "low loss rate" function was then incorporated. The RCFC&WCD Hydrology Manual's synthetic unit hydrograph method includes a "low loss rate" function when calculating effective rainfall (i.e. total rain minus infiltration).

Table 3: Developed Unit Hydrograph Analysis

		Peak Volume (Ac-Ft.)		Peak Runoff (Q, CFS)			
Area ID	Acreage (AC)	100-Year; 1-Hour	100-Year; 24-Hour	100-Year; 1-Hour	100-Year; 24-Hour	Basin ID	Basin Capacity (Ac-Ft.)
1	51.6	6.1	17.1	197.5	37.5	Basin 4	9.4
6	34.0	4.1	12.6	120.9	25.2	Basin 3	9.5
13	88.7	10.6	32.7	333.7	65.0	Basin 2	11.1
16	85.6	10.2	32.8	320.3	63.3	Basin 1	10.3

The developed unit hydrograph analysis models and results can be found in Appendix E.

The proposed basins serve as combination stormwater treatment basins and detention basins for increased runoff from the entire project site. The basins will mitigate the peak runoff flow rate for the 100-year, 1-hour event of which generates the highest peak runoff rate. The basins are designed to treat the runoff from their respective tributaries and detain the required stormwater quality design capture volume (VBMP), which receives the water via their proposed storm drain system. A summary of the basin volume calculations and properties can be found in Appendix F.

<u>BASIN ROUTING METHOD:</u>

The following assumptions/guidelines were made in the use of Reservoir Routing:

The Modified Pul's (Storage Indication) Method is used for the detention basin routing studies. The basin routing relationships are based upon the following formula:

$$I - O = DS/Dt \qquad \text{(Equation 1)}$$

Where:

I = Basin inflow rate (cfs)
O = Basin outflow rate (cfs)
DS = Change in basin storage during the time step (cubic feet)
Dt = time step (sec)

- The basin inflow rates are based on the developed unit hydrograph files (See Appendix E).
- Depth-Storage-Discharge curve is based on Basin Volume worksheet

- The procedure is repeated for each time step until the basin inflow hydrograph has been completely analyzed and the basin outflow becomes negligible.

For Basin 2 within Area 13, a basin routing model was prepared to demonstrate the mitigation performance of the proposed basin for the developed 100-year, 1-hour unit hydrograph analysis. The model includes the inflow rate from the unit hydrograph analysis, the volume and outflow rate per depth of basin, and a diversion/flow cutoff structure downstream for splitting the flow between culverts 11 and 13. The outlet structure flow rate was calculated using a combination of orifice (Equation 2) and weir (Equation 3) flows. A detailed table for the basins showing the storage volume and the total outflow rate can be found in Appendix F.

The orifice size was determined using the LID Extended Detention Basin BMP worksheet of which allows for the VBMP to be retained for at least 24 hours and less than 72 hours.

$$Q = CA(2gh)^{0.5} \qquad \text{(Equation 2)}$$

Where:

Q = Discharge in cfs

C = Coefficient of discharge (0.66)

A = area of opening in square feet

g = 32.2 ft/sec

h = depth of water to orifice invert (ft)

Above the VBMP water surface elevation, a 48-inch diameter riser is used for the 100-year mitigation using an equivalent length rectangular weir.

$$Q = Cw(L)(h)^{1.5} \qquad \text{(Equation 3)}$$

Q = Discharge in cfs

Cw = Coefficient of discharge (3.0)

L = length of rectangular weir in feet

h = depth of water to orifice invert (ft)

As part of the design of the basin and the routing model, it is assumed that the basin starts with VBMP volume and water surface elevation. This is to provide a conservative approach assuming that the basin had already experienced a storm event that has filled. This way, the basin is still able to provide the capacity to mitigate the 100-year events and protect the adjacent properties. After the basin routing model, the proposed Basin 2 achieved a maximum detention volume of 10.3 Ac-ft, a peak outflow rate of 138.5 cfs and a maximum depth of 4.7 ft. The proposed basin reduced the peak developed unit hydrograph runoff by 177 cfs.

Included in the model, a flow diversion/cutoff wall downstream of the basin. This diversion would restrict the flow going to culvert 13 to be no more than 138.8 cfs, whereas the exceeding flows would be diverted to culvert 11. The Basin 2 routing model output and results can be found in Appendix F.

At this time, only Basin 2 was analyzed with a basin routing model due to the developed unit hydrograph peak runoff exceeding the sum of the capacities of culverts 11 and 13.

CONCLUSIONS:

The Beaumont Pointe Specific Plan project will utilize onsite drainage systems consisting of parking inlets, catch basins, storm drain pipe varying from 18" to 48" diameter, outlet structures, a flow diversion structure, and four water quality basins. The onsite stormwater system will be designed to bypass offsite tributary flows from the south, intercept and treat runoff from the development, and provide peak flow mitigation for the 100-year storm events. The treated stormwater runoff from the basin outlets to the natural and historical detention areas upstream of their respective existing culverts. The proposed design meets the water quality and drainage mitigation criteria and will not result in a substantial increase in rate or amount of runoff that would result in on- or off-site flooding or exceed the existing or planned stormwater system.

Section 4: Vicinity Map

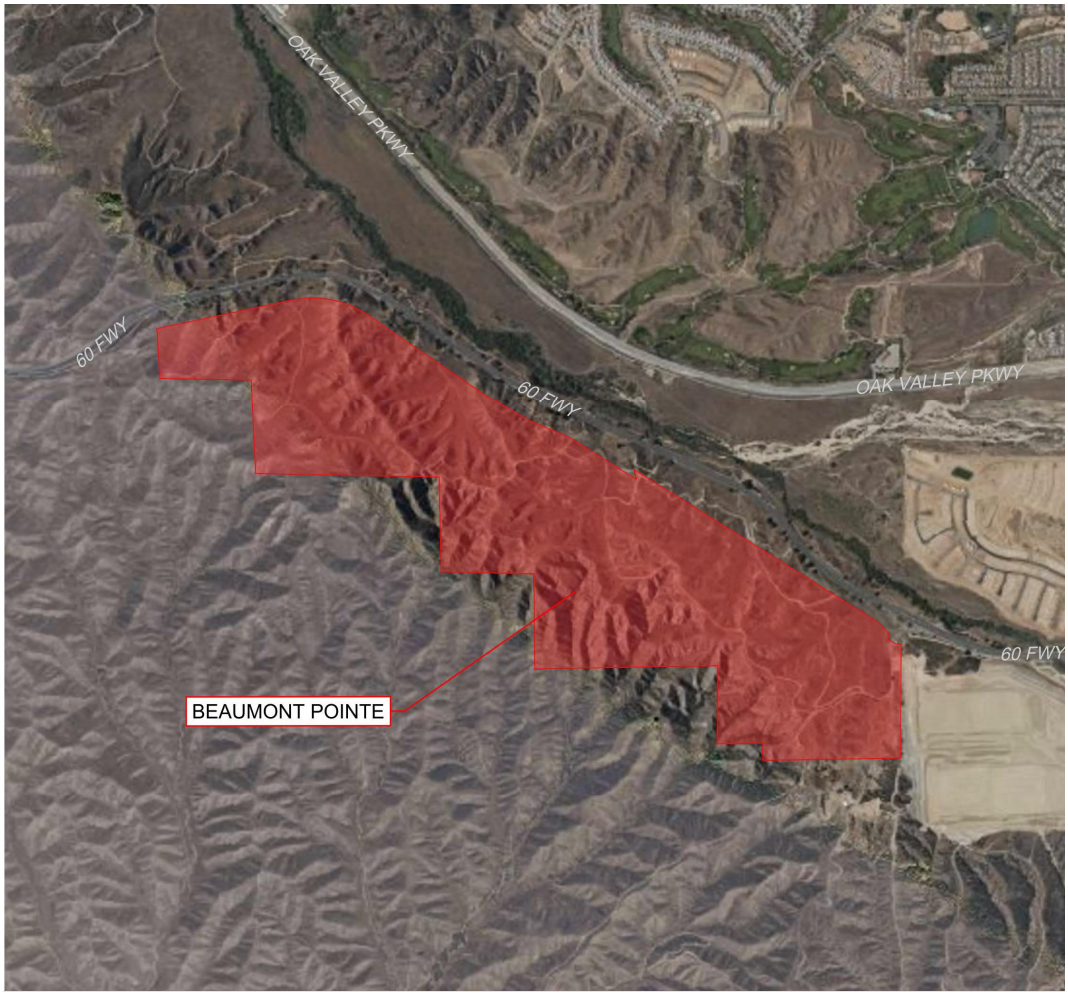

Riverside County Flood Control & Water Conservation District Plates..... A

- NRCS Web Soil Survey Hydrological Soils Group Map
- NOAA Atlas 14 Rainfall Data
- Slope of Intensity Duration Curve (Plate D-4.6)

Hydrologic Soil Group—Western Riverside Area, California
(PXH-boundary)

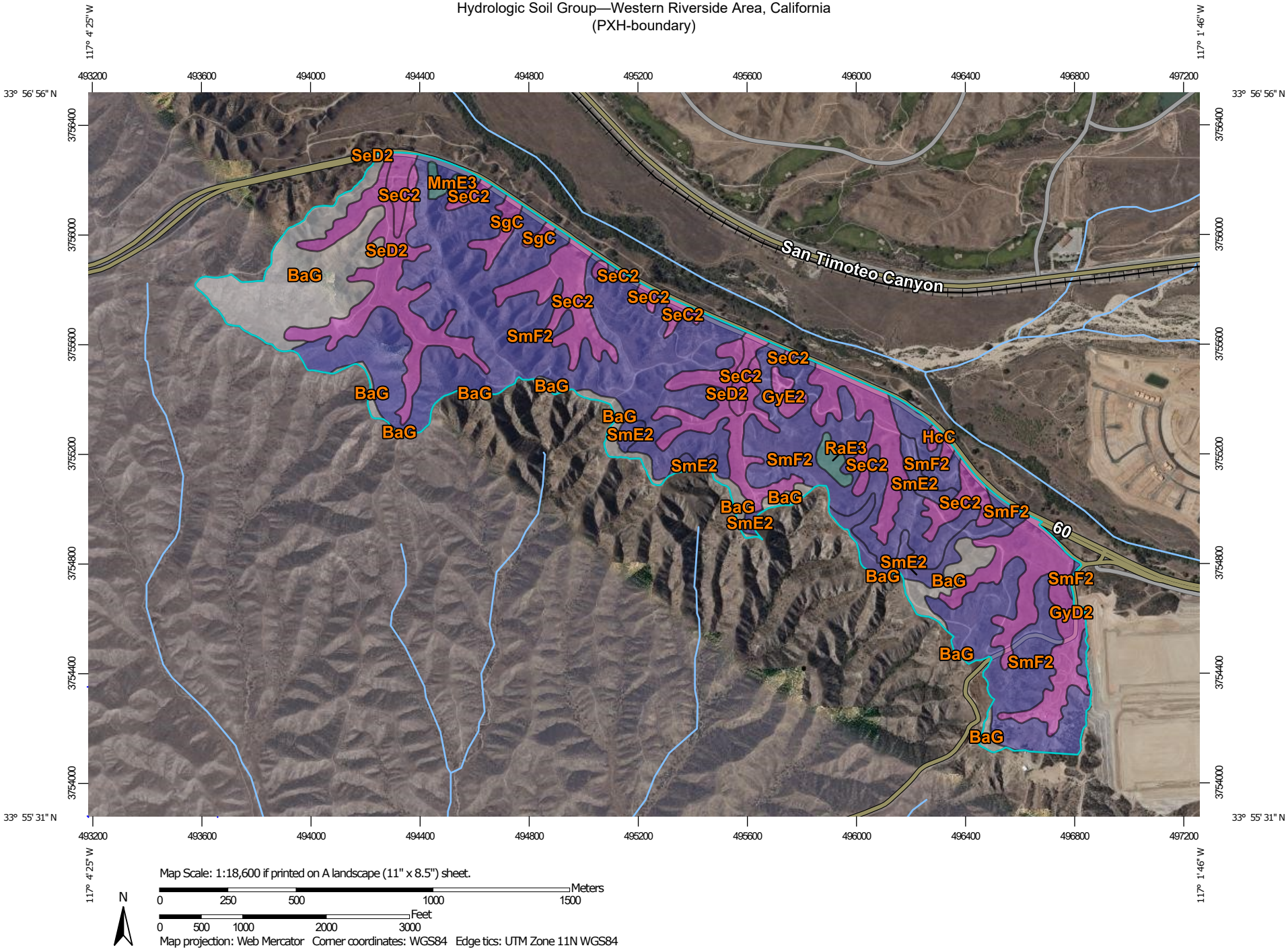

Map Scale: 1:18,600 if printed on A landscape (11" x 8.5") sheet.

N

Meters: 0 250 500 1000 1500

Feet: 0 500 1000 2000 3000

Map projection: Web Mercator Corner coordinates: WGS84 Edge tics: UTM Zone 11N WGS84

MAP LEGEND

Area of Interest (AOI)

Area of Interest (AOI)

Soils

Soil Rating Polygons

- A
- A/D
- B
- B/D
- C
- C/D
- D
- Not rated or not available

Soil Rating Lines

- A
- A/D
- B
- B/D
- C
- C/D
- D
- Not rated or not available

Soil Rating Points

- A
- A/D
- B
- B/D
- C
- C/D
- D
- Not rated or not available

Water Features

Streams and Canals

Transportation

- Rails
- Interstate Highways
- US Routes
- Major Roads
- Local Roads

Background

Aerial Photography

MAP INFORMATION

The soil surveys that comprise your AOI were mapped at 1:15,800.

Please rely on the bar scale on each map sheet for map measurements.

Source of Map: Natural Resources Conservation Service
Web Soil Survey URL:
Coordinate System: Web Mercator (EPSG:3857)

Maps from the Web Soil Survey are based on the Web Mercator projection, which preserves direction and shape but distorts distance and area. A projection that preserves area, such as the Albers equal-area conic projection, should be used if more accurate calculations of distance or area are required.

This product is generated from the USDA-NRCS certified data as of the version date(s) listed below.

Soil Survey Area: Western Riverside Area, California
Survey Area Data: Version 13, May 27, 2020

Soil map units are labeled (as space allows) for map scales 1:50,000 or larger.

Date(s) aerial images were photographed: Dec 31, 2009—Aug 31, 2018

The orthophoto or other base map on which the soil lines were compiled and digitized probably differs from the background imagery displayed on these maps. As a result, some minor shifting of map unit boundaries may be evident.

Hydrologic Soil Group

Map unit symbol	Map unit name	Rating	Acres in AOI	Percent of AOI
BaG	Badland		67.2	12.9%
GyC2	Greenfield sandy loam, 2 to 8 percent slopes, eroded	A	0.7	0.1%
GyD2	Greenfield sandy loam, 8 to 15 percent slopes, eroded	A	33.2	6.4%
GyE2	Greenfield sandy loam, 15 to 25 percent slopes, eroded	A	3.3	0.6%
HcC	Hanford coarse sandy loam, 2 to 8 percent slopes	A	2.1	0.4%
MmE3	Monserate sandy loam, 15 to 25 percent slopes, severely eroded	C	1.9	0.4%
RaE3	Ramona sandy loam, 15 to 25 percent slopes, severely eroded	C	3.3	0.6%
SeC2	San Emigdio fine sandy loam, 2 to 8 percent slopes, eroded	A	58.2	11.2%
SeD2	San Emigdio fine sandy loam, 8 to 15 percent slopes, eroded	A	54.7	10.5%
SgC	San Emigdio loam, 2 to 8 percent slopes	A	5.4	1.0%
SmE2	San Timoteo loam, 8 to 25 percent slopes, eroded	B	20.5	3.9%
SmF2	San Timoteo loam, 25 to 50 percent slopes, eroded	B	268.9	51.8%
Totals for Area of Interest			**519.5**	**100.0%**

Description

Hydrologic soil groups are based on estimates of runoff potential. Soils are assigned to one of four groups according to the rate of water infiltration when the soils are not protected by vegetation, are thoroughly wet, and receive precipitation from long-duration storms.

The soils in the United States are assigned to four groups (A, B, C, and D) and three dual classes (A/D, B/D, and C/D). The groups are defined as follows:

Group A. Soils having a high infiltration rate (low runoff potential) when thoroughly wet. These consist mainly of deep, well drained to excessively drained sands or gravelly sands. These soils have a high rate of water transmission.

Group B. Soils having a moderate infiltration rate when thoroughly wet. These consist chiefly of moderately deep or deep, moderately well drained or well drained soils that have moderately fine texture to moderately coarse texture. These soils have a moderate rate of water transmission.

Group C. Soils having a slow infiltration rate when thoroughly wet. These consist chiefly of soils having a layer that impedes the downward movement of water or soils of moderately fine texture or fine texture. These soils have a slow rate of water transmission.

Group D. Soils having a very slow infiltration rate (high runoff potential) when thoroughly wet. These consist chiefly of clays that have a high shrink-swell potential, soils that have a high water table, soils that have a claypan or clay layer at or near the surface, and soils that are shallow over nearly impervious material. These soils have a very slow rate of water transmission.

If a soil is assigned to a dual hydrologic group (A/D, B/D, or C/D), the first letter is for drained areas and the second is for undrained areas. Only the soils that in their natural condition are in group D are assigned to dual classes.

Rating Options

Aggregation Method: Dominant Condition

Component Percent Cutoff: None Specified

Tie-break Rule: Higher

NOAA Atlas 14, Volume 6, Version 2
Location name: Beaumont, California, USA*
Latitude: 33.9382°, Longitude: -117.051°
Elevation: 2359.04 ft**
* source: ESRI Maps
** source: USGS

POINT PRECIPITATION FREQUENCY ESTIMATES

Sanja Perica, Sarah Dietz, Sarah Heim, Lillian Hiner, Kazungu Maitaria, Deborah Martin, Sandra Pavlovic, Ishani Roy, Carl Trypaluk, Dale Unruh, Fenglin Yan, Michael Yekta, Tan Zhao, Geoffrey Bonnin, Daniel Brewer, Li-Chuan Chen, Tye Parzybok, John Yarchoan

NOAA, National Weather Service, Silver Spring, Maryland

PF_tabular | PF_graphical | Maps_&_aerials

PF tabular

PDS-based point precipitation frequency estimates with 90% confidence intervals (in inches)[1]

Duration	Average recurrence interval (years)									
	1	2	5	10	25	50	100	200	500	1000
5-min	0.112 (0.093-0.136)	0.146 (0.121-0.177)	0.194 (0.161-0.236)	0.236 (0.194-0.289)	0.299 (0.238-0.379)	0.352 (0.274-0.457)	0.412 (0.312-0.548)	0.479 (0.353-0.656)	0.582 (0.411-0.832)	0.672 (0.459-0.996)
10-min	0.161 (0.134-0.195)	0.209 (0.174-0.253)	0.278 (0.230-0.338)	0.338 (0.278-0.415)	0.428 (0.340-0.544)	0.505 (0.393-0.655)	0.590 (0.448-0.785)	0.687 (0.506-0.941)	0.834 (0.589-1.19)	0.964 (0.657-1.43)
15-min	0.194 (0.162-0.235)	0.253 (0.210-0.307)	0.336 (0.279-0.408)	0.409 (0.336-0.501)	0.518 (0.412-0.657)	0.610 (0.475-0.792)	0.713 (0.541-0.949)	0.830 (0.612-1.14)	1.01 (0.713-1.44)	1.17 (0.795-1.73)
30-min	0.288 (0.240-0.349)	0.375 (0.312-0.455)	0.499 (0.414-0.607)	0.607 (0.500-0.745)	0.769 (0.612-0.976)	0.907 (0.706-1.18)	1.06 (0.804-1.41)	1.23 (0.909-1.69)	1.50 (1.06-2.14)	1.73 (1.18-2.57)
60-min	0.423 (0.353-0.513)	0.551 (0.458-0.668)	0.731 (0.607-0.890)	0.890 (0.733-1.09)	1.13 (0.897-1.43)	1.33 (1.03-1.73)	1.56 (1.18-2.07)	1.81 (1.33-2.48)	2.20 (1.55-3.14)	2.54 (1.73-3.76)
2-hr	0.613 (0.511-0.742)	0.777 (0.647-0.943)	1.01 (0.835-1.22)	1.20 (0.991-1.48)	1.49 (1.19-1.90)	1.73 (1.35-2.25)	1.99 (1.51-2.65)	2.28 (1.68-3.12)	2.70 (1.91-3.86)	3.05 (2.08-4.52)
3-hr	0.757 (0.631-0.917)	0.952 (0.792-1.16)	1.22 (1.01-1.49)	1.45 (1.19-1.78)	1.78 (1.42-2.26)	2.05 (1.60-2.66)	2.34 (1.78-3.12)	2.66 (1.96-3.64)	3.12 (2.20-4.45)	3.50 (2.38-5.18)
6-hr	1.09 (0.910-1.32)	1.37 (1.14-1.66)	1.74 (1.44-2.11)	2.05 (1.69-2.52)	2.49 (1.98-3.17)	2.85 (2.22-3.70)	3.22 (2.45-4.29)	3.62 (2.67-4.96)	4.19 (2.96-5.99)	4.64 (3.17-6.88)
12-hr	1.47 (1.23-1.78)	1.86 (1.55-2.26)	2.39 (1.99-2.91)	2.83 (2.33-3.47)	3.43 (2.73-4.36)	3.91 (3.04-5.07)	4.40 (3.34-5.86)	4.92 (3.62-6.73)	5.63 (3.97-8.04)	6.19 (4.22-9.17)
24-hr	1.95 (1.73-2.25)	2.54 (2.24-2.93)	3.31 (2.92-3.83)	3.94 (3.45-4.60)	4.82 (4.08-5.80)	5.49 (4.56-6.75)	6.18 (5.01-7.79)	6.90 (5.44-8.94)	7.89 (5.98-10.6)	8.66 (6.34-12.1)
2-day	2.36 (2.09-2.72)	3.13 (2.77-3.61)	4.17 (3.67-4.82)	5.03 (4.40-5.87)	6.25 (5.29-7.53)	7.22 (5.99-8.88)	8.23 (6.67-10.4)	9.30 (7.33-12.0)	10.8 (8.18-14.6)	12.0 (8.79-16.7)
3-day	2.55 (2.25-2.94)	3.41 (3.01-3.93)	4.60 (4.05-5.32)	5.61 (4.91-6.54)	7.06 (5.98-8.50)	8.23 (6.83-10.1)	9.48 (7.68-11.9)	10.8 (8.53-14.0)	12.7 (9.65-17.2)	14.3 (10.5-19.9)
4-day	2.76 (2.44-3.18)	3.72 (3.29-4.29)	5.05 (4.45-5.84)	6.19 (5.41-7.22)	7.82 (6.62-9.42)	9.15 (7.59-11.3)	10.6 (8.56-13.3)	12.1 (9.55-15.7)	14.3 (10.8-19.3)	16.1 (11.8-22.5)
7-day	3.17 (2.81-3.66)	4.30 (3.80-4.96)	5.85 (5.16-6.77)	7.17 (6.27-8.36)	9.06 (7.67-10.9)	10.6 (8.78-13.0)	12.2 (9.89-15.4)	13.9 (11.0-18.0)	16.4 (12.4-22.1)	18.5 (13.5-25.7)
10-day	3.45 (3.05-3.98)	4.69 (4.14-5.41)	6.39 (5.63-7.39)	7.83 (6.85-9.14)	9.89 (8.37-11.9)	11.5 (9.58-14.2)	13.3 (10.8-16.7)	15.2 (12.0-19.6)	17.8 (13.5-24.0)	20.0 (14.6-27.9)
20-day	4.26 (3.77-4.92)	5.84 (5.17-6.74)	8.00 (7.05-9.26)	9.82 (8.59-11.5)	12.4 (10.5-14.9)	14.5 (12.0-17.8)	16.6 (13.5-21.0)	19.0 (14.9-24.5)	22.2 (16.8-29.9)	24.8 (18.2-34.6)
30-day	5.04 (4.47-5.82)	6.92 (6.12-7.99)	9.48 (8.36-11.0)	11.6 (10.2-13.6)	14.7 (12.4-17.7)	17.1 (14.2-21.1)	19.7 (15.9-24.8)	22.4 (17.7-29.0)	26.2 (19.8-35.3)	29.3 (21.4-40.8)
45-day	6.05 (5.35-6.97)	8.27 (7.31-9.54)	11.3 (9.95-13.1)	13.8 (12.1-16.1)	17.4 (14.7-21.0)	20.2 (16.8-24.9)	23.2 (18.8-29.3)	26.4 (20.8-34.2)	30.9 (23.4-41.6)	34.4 (25.2-48.0)
60-day	7.07 (6.26-8.15)	9.59 (8.48-11.1)	13.0 (11.5-15.1)	15.9 (13.9-18.5)	19.9 (16.9-24.0)	23.2 (19.2-28.5)	26.5 (21.5-33.4)	30.1 (23.7-39.0)	35.1 (26.6-47.4)	39.2 (28.7-54.6)

[1] Precipitation frequency (PF) estimates in this table are based on frequency analysis of partial duration series (PDS).

Numbers in parenthesis are PF estimates at lower and upper bounds of the 90% confidence interval. The probability that precipitation frequency estimates (for a given duration and average recurrence interval) will be greater than the upper bound (or less than the lower bound) is 5%. Estimates at upper bounds are not checked against probable maximum precipitation (PMP) estimates and may be higher than currently valid PMP values.

Please refer to NOAA Atlas 14 document for more information.

Back to Top

PF graphical

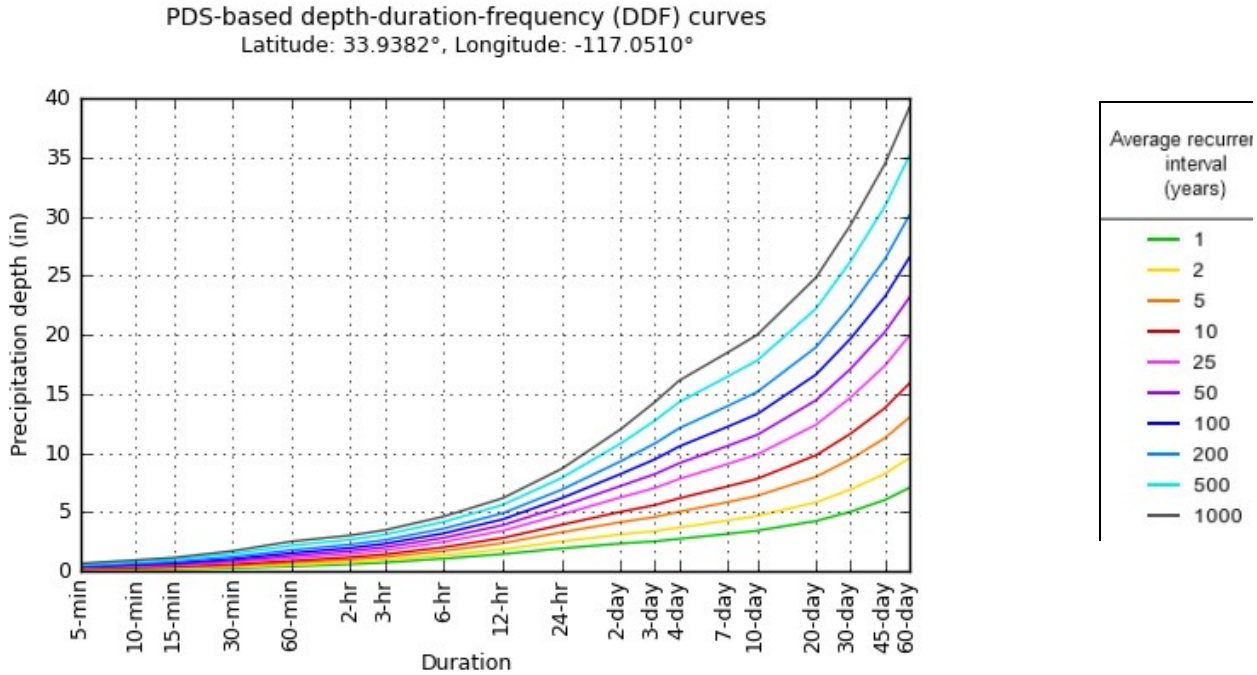

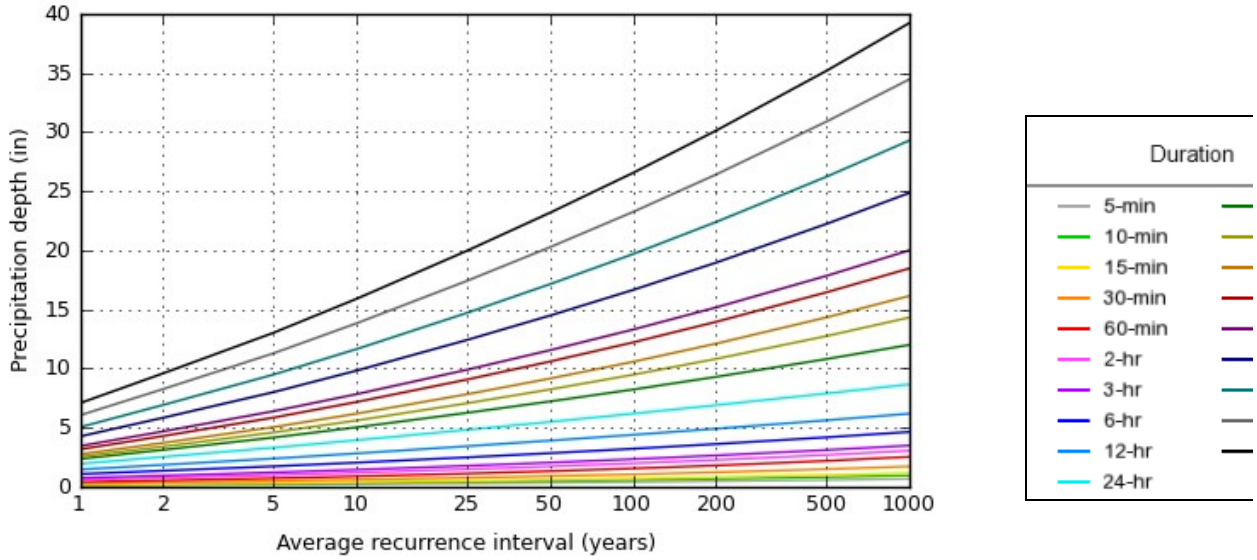

NOAA Atlas 14, Volume 6, Version 2

Created (GMT): Thu May 28 23:17:27 2020

Back to Top

Maps & aerials

Small scale terrain

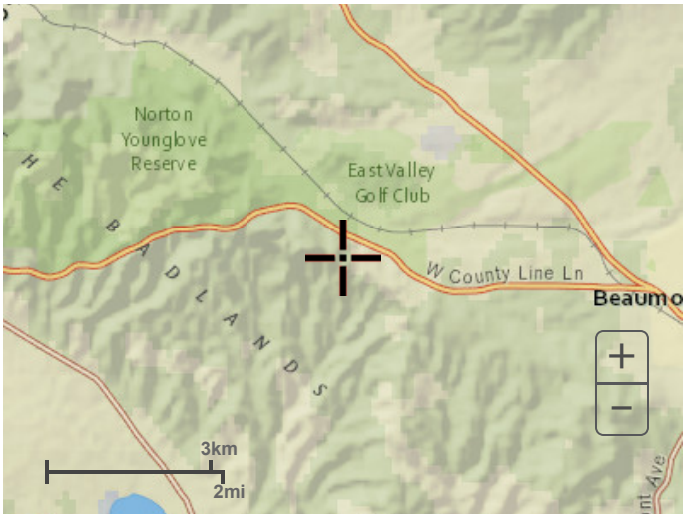

Large scale terrain

Large scale map

Large scale aerial

[Back to Top](#)

US Department of Commerce
National Oceanic and Atmospheric Administration
National Weather Service
National Water Center
1325 East West Highway
Silver Spring, MD 20910
Questions?: HDSC.Questions@noaa.gov

Disclaimer

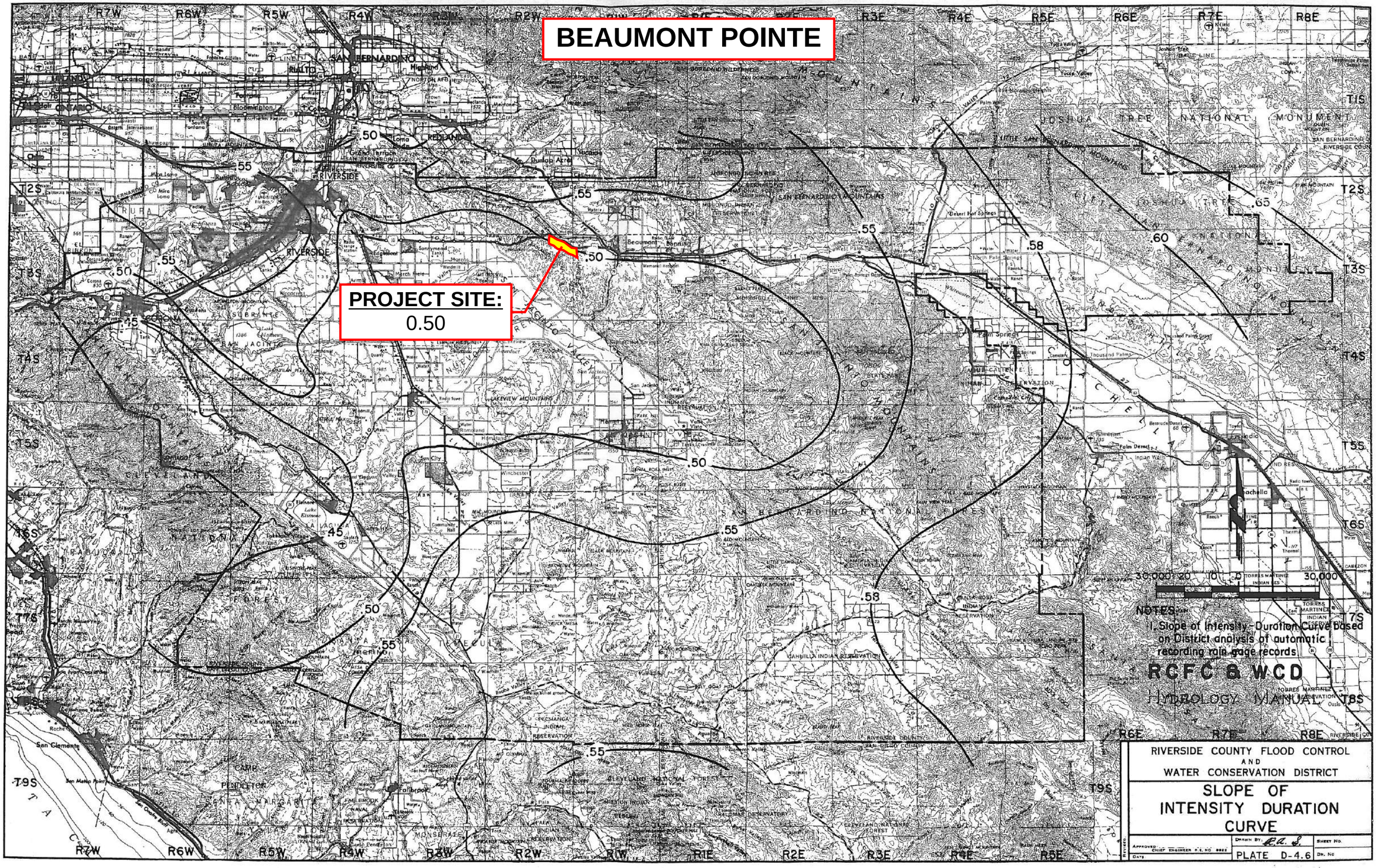
BEAUMONT POINTE
PROJECT SITE:
0.50
.50
.55
.58
.60
.65
.45
R7W
R6W
R5W
R4W
R3W
R2W
R1W
R1E
R2E
R3E
R4E
R5E
R6E
R7E
R8E
T2S
T3S
T4S
T5S
T6S
T7S
T8S
T9S
SAN BERNARDINO
RIALTO
ONTARIO
RIVERSIDE
Beaumont
Banning
Hemet
San Jacinto
Perris
San Clemente
Fallbrook
Palm Springs
Indio
JOSHUA TREE NATIONAL MONUMENT
SAN BERNARDINO NATIONAL FOREST
CLEVELAND NATIONAL FOREST
30,000 20 10 0 30,000
NOTES:
1. Slope of Intensity-Duration Curve based on District analysis of automatic recording rain gage records
RCFC & WCD
HYDROLOGY MANUAL
RIVERSIDE COUNTY FLOOD CONTROL AND WATER CONSERVATION DISTRICT
SLOPE OF INTENSITY DURATION CURVE
PLATE D-4.6

Existing Hydrology Model and Results ..... B

```
              Riverside County Rational Hydrology Program

CIVILCADD/CIVILDESIGN Engineering Software,(c) 1989 - 2005 Version 7.1
       Rational Hydrology Study        Date: 10/06/20  File:PX100.out
------------------------------------------------------------------------
BEAUMONT POINTE
PRELIMINARY HYDROLOGY STUDY
AREA 100 EXISTING
100-YEAR
------------------------------------------------------------------------
 *********   Hydrology Study Control Information **********

 English (in-lb) Units used in input data file

------------------------------------------------------------------------


Program License Serial Number 6094

------------------------------------------------------------------------
Rational Method Hydrology Program based on
Riverside County Flood Control & Water Conservation District
1978 hydrology manual

Storm event (year) =  100.00 Antecedent Moisture Condition = 3

2 year, 1 hour precipitation =  0.551(In.)
100 year, 1 hour precipitation =  1.560(In.)

Storm event year = 100.0
Calculated rainfall intensity data:
1 hour intensity =  1.560(In/Hr)
Slope of intensity duration curve = 0.5000




++++++++++++++++++++++++++++++++++++++++++++++++++++++++++++++++++++++
Process from Point/Station      100.000 to Point/Station     101.000
**** INITIAL AREA EVALUATION ****
______________________________________________________________________
Initial area flow distance =   907.600(Ft.)
Top (of initial area) elevation =  2500.000(Ft.)
Bottom (of initial area) elevation =  2417.000(Ft.)
Difference in elevation =    83.000(Ft.)
Slope =    0.09145  s(percent)=       9.14
TC = k(0.530)*[(length^3)/(elevation change)]^0.2
Initial area time of concentration =   13.038 min.
Rainfall intensity =      3.347(In/Hr) for a   100.0 year storm
UNDEVELOPED (poor cover) subarea
Runoff Coefficient = 0.884
Decimal fraction soil group A = 0.000
Decimal fraction soil group B = 0.000
Decimal fraction soil group C = 0.000
Decimal fraction soil group D = 1.000
RI index for soil(AMC 3)  =  95.60
Pervious area fraction =  1.000; Impervious fraction =  0.000
Initial subarea runoff =     17.510(CFS)
Total initial stream area =        5.920(Ac.)
Pervious area fraction = 1.000


++++++++++++++++++++++++++++++++++++++++++++++++++++++++++++++++++++++
Process from Point/Station      101.000 to Point/Station      102.000
```

```
**** NATURAL CHANNEL TIME + SUBAREA FLOW ADDITION ****
____________________________________________________________________
Top of natural channel elevation =   2417.000(Ft.)
End of natural channel elevation =   2286.100(Ft.)
Length of natural channel  =  1721.600(Ft.)
Estimated mean flow rate at midpoint of channel =     62.567(CFS)

Natural valley channel type used
L.A. County flood control district formula for channel velocity:
 Velocity(ft/s) = (7 + 8(q(English Units)^.352)(slope^0.5)
Velocity using mean channel flow =  11.39(Ft/s)

Correction to map slope used on extremely rugged channels with
drops and waterfalls (Plate D-6.2)
       Normal channel slope =  0.0760
Corrected/adjusted channel slope =  0.0760
Travel time =    2.52 min.     TC =   15.56  min.


 Adding area flow to channel
UNDEVELOPED (poor cover) subarea
Runoff Coefficient = 0.868
Decimal fraction soil group A = 0.190
Decimal fraction soil group B = 0.270
Decimal fraction soil group C = 0.000
Decimal fraction soil group D = 0.540
RI index for soil(AMC 3)  =  92.11
Pervious area fraction =  1.000; Impervious fraction =  0.000
Rainfall intensity =      3.064(In/Hr) for a   100.0 year storm
Subarea runoff =     80.990(CFS) for     30.468(Ac.)
Total runoff =     98.500(CFS)   Total area =      36.388(Ac.)


++++++++++++++++++++++++++++++++++++++++++++++++++++++++++++++++++++++
Process from Point/Station      102.000 to Point/Station      102.000
**** CONFLUENCE OF MAIN STREAMS ****
____________________________________________________________________
The following data inside Main Stream is listed:
In Main Stream number: 1
Stream flow area =     36.388(Ac.)
Runoff from this stream =     98.500(CFS)
Time of concentration =   15.56 min.
Rainfall intensity =     3.064(In/Hr)
Program is now starting with Main Stream No. 2


++++++++++++++++++++++++++++++++++++++++++++++++++++++++++++++++++++++
Process from Point/Station      103.000 to Point/Station      104.000
**** INITIAL AREA EVALUATION ****
____________________________________________________________________
Initial area flow distance =   577.200(Ft.)
Top (of initial area) elevation =  2431.000(Ft.)
Bottom (of initial area) elevation =  2349.900(Ft.)
Difference in elevation =    81.100(Ft.)
Slope =    0.14051  s(percent)=      14.05
TC = k(0.530)*[(length^3)/(elevation change)]^0.2
Initial area time of concentration =    9.983 min.
Rainfall intensity =      3.824(In/Hr) for a   100.0 year storm
UNDEVELOPED (poor cover) subarea
Runoff Coefficient = 0.865
Decimal fraction soil group A = 0.140
Decimal fraction soil group B = 0.750
Decimal fraction soil group C = 0.000
Decimal fraction soil group D = 0.110
RI index for soil(AMC 3)  =  89.60
Pervious area fraction =  1.000; Impervious fraction =  0.000
```

```
Initial subarea runoff =     26.161(CFS)
Total initial stream area =        7.908(Ac.)
Pervious area fraction = 1.000


++++++++++++++++++++++++++++++++++++++++++++++++++++++++++++++++++++++
Process from Point/Station      104.000 to Point/Station      102.000
**** NATURAL CHANNEL TIME + SUBAREA FLOW ADDITION ****
______________________________________________________________________
Top of natural channel elevation =   2349.900(Ft.)
End of natural channel elevation =   2286.100(Ft.)
Length of natural channel  =  1353.100(Ft.)
Estimated mean flow rate at midpoint of channel =     94.525(CFS)

Natural valley channel type used
L.A. County flood control district formula for channel velocity:
 Velocity(ft/s) = (7 + 8(q(English Units)^.352)(slope^0.5)
Velocity using mean channel flow =  10.13(Ft/s)

Correction to map slope used on extremely rugged channels with
drops and waterfalls (Plate D-6.2)
       Normal channel slope =  0.0472
Corrected/adjusted channel slope =  0.0472
Travel time =    2.23 min.     TC =   12.21  min.


 Adding area flow to channel
UNDEVELOPED (poor cover) subarea
Runoff Coefficient = 0.856
Decimal fraction soil group A = 0.250
Decimal fraction soil group B = 0.730
Decimal fraction soil group C = 0.000
Decimal fraction soil group D = 0.020
RI index for soil(AMC 3)  =  88.28
Pervious area fraction =  1.000; Impervious fraction =  0.000
Rainfall intensity =      3.458(In/Hr) for a   100.0 year storm
Subarea runoff =    122.381(CFS) for     41.331(Ac.)
Total runoff =    148.542(CFS)   Total area =      49.239(Ac.)


++++++++++++++++++++++++++++++++++++++++++++++++++++++++++++++++++++++
Process from Point/Station      102.000 to Point/Station      102.000
**** CONFLUENCE OF MAIN STREAMS ****
______________________________________________________________________
The following data inside Main Stream is listed:
In Main Stream number: 2
Stream flow area =     49.239(Ac.)
Runoff from this stream =    148.542(CFS)
Time of concentration =   12.21 min.
Rainfall intensity =     3.458(In/Hr)
Summary of stream data:

Stream   Flow rate      TC            Rainfall Intensity
 No.       (CFS)       (min)                 (In/Hr)


1       98.500     15.56            3.064
2      148.542     12.21            3.458
Largest stream flow has longer or shorter time of concentration
Qp =    148.542 + sum of
         Qa          Tb/Ta
         98.500 *    0.785 =     77.300
Qp =    225.842

Total of 2 main streams to confluence:
Flow rates before confluence point:
```

```
      98.500     148.542
Area of streams before confluence:
       36.388       49.239


Results of confluence:
Total flow rate =    225.842(CFS)
Time of concentration =    12.208 min.
Effective stream area after confluence  =     85.627(Ac.)


++++++++++++++++++++++++++++++++++++++++++++++++++++++++++++++++++++++
Process from Point/Station      102.000 to Point/Station      105.000
**** NATURAL CHANNEL TIME + SUBAREA FLOW ADDITION ****
______________________________________________________________________
Top of natural channel elevation =   2286.100(Ft.)
End of natural channel elevation =   2230.000(Ft.)
Length of natural channel  =  1718.300(Ft.)
Estimated mean flow rate at midpoint of channel =    267.201(CFS)

Natural valley channel type used
L.A. County flood control district formula for channel velocity:
 Velocity(ft/s) = (7 + 8(q(English Units)^.352)(slope^0.5)
Velocity using mean channel flow =  11.60(Ft/s)

Correction to map slope used on extremely rugged channels with
drops and waterfalls (Plate D-6.2)
       Normal channel slope =  0.0326
Corrected/adjusted channel slope =  0.0326
Travel time =    2.47 min.     TC =   14.68  min.


 Adding area flow to channel
UNDEVELOPED (poor cover) subarea
Runoff Coefficient = 0.852
Decimal fraction soil group A = 0.490
Decimal fraction soil group B = 0.250
Decimal fraction soil group C = 0.000
Decimal fraction soil group D = 0.260
RI index for soil(AMC 3)  =  88.28
Pervious area fraction =  1.000; Impervious fraction =  0.000
Rainfall intensity =      3.154(In/Hr) for a   100.0 year storm
Subarea runoff =     84.297(CFS) for     31.362(Ac.)
Total runoff =    310.139(CFS)   Total area =     116.989(Ac.)


++++++++++++++++++++++++++++++++++++++++++++++++++++++++++++++++++++++
Process from Point/Station      105.000 to Point/Station      105.000
**** CONFLUENCE OF MAIN STREAMS ****
______________________________________________________________________
The following data inside Main Stream is listed:
In Main Stream number: 1
Stream flow area =    116.989(Ac.)
Runoff from this stream =    310.139(CFS)
Time of concentration =   14.68 min.
Rainfall intensity =     3.154(In/Hr)
Program is now starting with Main Stream No. 2


++++++++++++++++++++++++++++++++++++++++++++++++++++++++++++++++++++++
Process from Point/Station      106.000 to Point/Station      107.000
**** INITIAL AREA EVALUATION ****
______________________________________________________________________
Initial area flow distance =   859.900(Ft.)
Top (of initial area) elevation =  2540.000(Ft.)
Bottom (of initial area) elevation =  2310.000(Ft.)
```

```
Difference in elevation =   230.000(Ft.)
Slope =    0.26747  s(percent)=      26.75
TC = k(0.530)*[(length^3)/(elevation change)]^0.2
Initial area time of concentration =   10.294 min.
Rainfall intensity =      3.766(In/Hr) for a   100.0 year storm
UNDEVELOPED (poor cover) subarea
Runoff Coefficient = 0.883
Decimal fraction soil group A = 0.070
Decimal fraction soil group B = 0.000
Decimal fraction soil group C = 0.000
Decimal fraction soil group D = 0.930
RI index for soil(AMC 3)  =  94.98
Pervious area fraction =  1.000; Impervious fraction =  0.000
Initial subarea runoff =     28.572(CFS)
Total initial stream area =        8.587(Ac.)
Pervious area fraction = 1.000


++++++++++++++++++++++++++++++++++++++++++++++++++++++++++++++++++++++
Process from Point/Station      107.000 to Point/Station      105.000
**** NATURAL CHANNEL TIME + SUBAREA FLOW ADDITION ****
______________________________________________________________________
Top of natural channel elevation =   2310.000(Ft.)
End of natural channel elevation =   2230.000(Ft.)
Length of natural channel  =  1513.500(Ft.)
Estimated mean flow rate at midpoint of channel =     52.649(CFS)

Natural valley channel type used
L.A. County flood control district formula for channel velocity:
 Velocity(ft/s) = (7 + 8(q(English Units)^.352)(slope^0.5)
Velocity using mean channel flow =   9.03(Ft/s)

Correction to map slope used on extremely rugged channels with
drops and waterfalls (Plate D-6.2)
       Normal channel slope =  0.0529
Corrected/adjusted channel slope =  0.0529
Travel time =    2.79 min.     TC =   13.09  min.


 Adding area flow to channel
UNDEVELOPED (poor cover) subarea
Runoff Coefficient = 0.866
Decimal fraction soil group A = 0.400
Decimal fraction soil group B = 0.000
Decimal fraction soil group C = 0.000
Decimal fraction soil group D = 0.600
RI index for soil(AMC 3)  =  91.12
Pervious area fraction =  1.000; Impervious fraction =  0.000
Rainfall intensity =      3.340(In/Hr) for a   100.0 year storm
Subarea runoff =     41.877(CFS) for     14.472(Ac.)
Total runoff =     70.449(CFS)   Total area =      23.059(Ac.)


++++++++++++++++++++++++++++++++++++++++++++++++++++++++++++++++++++++
Process from Point/Station      105.000 to Point/Station      105.000
**** CONFLUENCE OF MAIN STREAMS ****
______________________________________________________________________
The following data inside Main Stream is listed:
In Main Stream number: 2
Stream flow area =     23.059(Ac.)
Runoff from this stream =     70.449(CFS)
Time of concentration =   13.09 min.
Rainfall intensity =     3.340(In/Hr)
Summary of stream data:

Stream   Flow rate      TC            Rainfall Intensity
```

```
 No.       (CFS)       (min)                 (In/Hr)


1      310.139     14.68            3.154
2       70.449     13.09            3.340
Largest stream flow has longer time of concentration
Qp =    310.139 + sum of
         Qb         Ia/Ib
         70.449 *    0.944 =     66.523
Qp =    376.662

Total of 2 main streams to confluence:
Flow rates before confluence point:
     310.139      70.449
Area of streams before confluence:
      116.989       23.059


Results of confluence:
Total flow rate =    376.662(CFS)
Time of concentration =    14.677 min.
Effective stream area after confluence  =    140.048(Ac.)


++++++++++++++++++++++++++++++++++++++++++++++++++++++++++++++++++++++
Process from Point/Station      105.000 to Point/Station      108.000
**** PIPEFLOW TRAVEL TIME (Program estimated size) ****
______________________________________________________________________
Upstream point/station elevation =  2230.000(Ft.)
Downstream point/station elevation =  2218.900(Ft.)
Pipe length  =   155.00(Ft.)   Manning's N = 0.013
No. of pipes = 1  Required pipe flow  =   376.662(CFS)
Nearest computed pipe diameter  =     48.00(In.)
Calculated individual pipe flow  =   376.662(CFS)
Normal flow depth in pipe =   38.53(In.)
Flow top width inside pipe =   38.20(In.)
Critical depth could not be calculated.
Pipe flow velocity =     34.87(Ft/s)
Travel time through pipe =    0.07 min.
Time of concentration (TC) =    14.75 min.
End of computations, total study area =          140.05 (Ac.)
The following figures may
be used for a unit hydrograph study of the same area.

Area averaged pervious area fraction(Ap) = 1.000
Area averaged RI index number =  78.8
```

```
              Riverside County Rational Hydrology Program

CIVILCADD/CIVILDESIGN Engineering Software,(c) 1989 - 2005 Version 7.1
       Rational Hydrology Study        Date: 10/04/20  File:PX200.out
----------------------------------------------------------------------
BEAUMONT POINTE
PRELIMINARY HYDROLOGY STUDY
AREA 200 EXISTING
100-YEAR
----------------------------------------------------------------------
 *********   Hydrology Study Control Information **********

 English (in-lb) Units used in input data file

----------------------------------------------------------------------


Program License Serial Number 6094

----------------------------------------------------------------------
Rational Method Hydrology Program based on
Riverside County Flood Control & Water Conservation District
1978 hydrology manual

Storm event (year) =  100.00 Antecedent Moisture Condition = 3

2 year, 1 hour precipitation =  0.551(In.)
100 year, 1 hour precipitation =  1.560(In.)

Storm event year = 100.0
Calculated rainfall intensity data:
1 hour intensity =  1.560(In/Hr)
Slope of intensity duration curve = 0.5000




++++++++++++++++++++++++++++++++++++++++++++++++++++++++++++++++++++++
Process from Point/Station      200.000 to Point/Station      201.000
**** INITIAL AREA EVALUATION ****
______________________________________________________________________
Initial area flow distance =   579.900(Ft.)
Top (of initial area) elevation =  2390.000(Ft.)
Bottom (of initial area) elevation =  2250.000(Ft.)
Difference in elevation =   140.000(Ft.)
Slope =    0.24142  s(percent)=      24.14
TC = k(0.530)*[(length^3)/(elevation change)]^0.2
Initial area time of concentration =    8.976 min.
Rainfall intensity =      4.033(In/Hr) for a   100.0 year storm
UNDEVELOPED (poor cover) subarea
Runoff Coefficient = 0.855
Decimal fraction soil group A = 0.520
Decimal fraction soil group B = 0.480
Decimal fraction soil group C = 0.000
Decimal fraction soil group D = 0.000
RI index for soil(AMC 3)  =  86.37
Pervious area fraction =  1.000; Impervious fraction =  0.000
Initial subarea runoff =      9.015(CFS)
Total initial stream area =        2.613(Ac.)
Pervious area fraction = 1.000


++++++++++++++++++++++++++++++++++++++++++++++++++++++++++++++++++++++
```

```
Process from Point/Station      201.000 to Point/Station      202.000
**** PIPEFLOW TRAVEL TIME (Program estimated size) ****
_____________________________________________________________________
Upstream point/station elevation =  2250.000(Ft.)
Downstream point/station elevation =  2219.600(Ft.)
Pipe length  =   167.30(Ft.)   Manning's N = 0.013
No. of pipes = 1  Required pipe flow  =     9.015(CFS)
Nearest computed pipe diameter  =     12.00(In.)
Calculated individual pipe flow  =     9.015(CFS)
Normal flow depth in pipe =    6.66(In.)
Flow top width inside pipe =   11.93(In.)
Critical depth could not be calculated.
Pipe flow velocity =     20.16(Ft/s)
Travel time through pipe =    0.14 min.
Time of concentration (TC) =     9.11 min.
End of computations, total study area =            2.61 (Ac.)
The following figures may
be used for a unit hydrograph study of the same area.

Area averaged pervious area fraction(Ap) = 1.000
Area averaged RI index number =  72.3
```

```
              Riverside County Rational Hydrology Program

CIVILCADD/CIVILDESIGN Engineering Software,(c) 1989 - 2005 Version 7.1
       Rational Hydrology Study        Date: 10/04/20  File:PX300.out
------------------------------------------------------------------------
BEAUMONT POINTE
PRELIMINARY HYDROLOGY STUDY
AREA 300 EXISTING
100-YEAR
------------------------------------------------------------------------
 *********   Hydrology Study Control Information **********

 English (in-lb) Units used in input data file

------------------------------------------------------------------------


Program License Serial Number 6094

------------------------------------------------------------------------
Rational Method Hydrology Program based on
Riverside County Flood Control & Water Conservation District
1978 hydrology manual

Storm event (year) =  100.00 Antecedent Moisture Condition = 3

2 year, 1 hour precipitation =  0.551(In.)
100 year, 1 hour precipitation =  1.560(In.)

Storm event year = 100.0
Calculated rainfall intensity data:
1 hour intensity =  1.560(In/Hr)
Slope of intensity duration curve = 0.5000




++++++++++++++++++++++++++++++++++++++++++++++++++++++++++++++++++++++
Process from Point/Station      300.000 to Point/Station      301.000
**** INITIAL AREA EVALUATION ****
______________________________________________________________________
Initial area flow distance =   982.400(Ft.)
Top (of initial area) elevation =  2430.200(Ft.)
Bottom (of initial area) elevation =  2224.800(Ft.)
Difference in elevation =   205.400(Ft.)
Slope =    0.20908  s(percent)=      20.91
TC = k(0.530)*[(length^3)/(elevation change)]^0.2
Initial area time of concentration =   11.406 min.
Rainfall intensity =      3.578(In/Hr) for a   100.0 year storm
UNDEVELOPED (poor cover) subarea
Runoff Coefficient = 0.857
Decimal fraction soil group A = 0.260
Decimal fraction soil group B = 0.740
Decimal fraction soil group C = 0.000
Decimal fraction soil group D = 0.000
RI index for soil(AMC 3)  =  88.08
Pervious area fraction =  1.000; Impervious fraction =  0.000
Initial subarea runoff =     28.437(CFS)
Total initial stream area =        9.276(Ac.)
Pervious area fraction = 1.000


++++++++++++++++++++++++++++++++++++++++++++++++++++++++++++++++++++++
Process from Point/Station      301.000 to Point/Station      302.000
```

```
**** PIPEFLOW TRAVEL TIME (Program estimated size) ****
_____________________________________________________________________
Upstream point/station elevation =  2224.800(Ft.)
Downstream point/station elevation =  2211.100(Ft.)
Pipe length  =   217.70(Ft.)   Manning's N = 0.013
No. of pipes = 1  Required pipe flow  =    28.437(CFS)
Nearest computed pipe diameter  =     21.00(In.)
Calculated individual pipe flow  =    28.437(CFS)
Normal flow depth in pipe =   13.14(In.)
Flow top width inside pipe =   20.33(In.)
Critical depth could not be calculated.
Pipe flow velocity =     17.96(Ft/s)
Travel time through pipe =    0.20 min.
Time of concentration (TC) =    11.61 min.
End of computations, total study area =            9.28 (Ac.)
The following figures may
be used for a unit hydrograph study of the same area.

Area averaged pervious area fraction(Ap) = 1.000
Area averaged RI index number =  75.1
```

```
              Riverside County Rational Hydrology Program

CIVILCADD/CIVILDESIGN Engineering Software,(c) 1989 - 2005 Version 7.1
       Rational Hydrology Study        Date: 10/04/20  File:PX400.out
----------------------------------------------------------------------
BEAUMONT POINTE
PRELIMINARY HYDROLOGY STUDY
AREA 400 EXISTING
100-YEAR
----------------------------------------------------------------------
 *********   Hydrology Study Control Information **********

 English (in-lb) Units used in input data file

----------------------------------------------------------------------


Program License Serial Number 6094

----------------------------------------------------------------------
Rational Method Hydrology Program based on
Riverside County Flood Control & Water Conservation District
1978 hydrology manual

Storm event (year) =  100.00 Antecedent Moisture Condition = 3

2 year, 1 hour precipitation =  0.551(In.)
100 year, 1 hour precipitation =  1.560(In.)

Storm event year = 100.0
Calculated rainfall intensity data:
1 hour intensity =  1.560(In/Hr)
Slope of intensity duration curve = 0.5000




++++++++++++++++++++++++++++++++++++++++++++++++++++++++++++++++++++++
Process from Point/Station      400.000 to Point/Station      401.000
**** INITIAL AREA EVALUATION ****
______________________________________________________________________
Initial area flow distance =   795.900(Ft.)
Top (of initial area) elevation =  2490.000(Ft.)
Bottom (of initial area) elevation =  2263.900(Ft.)
Difference in elevation =   226.100(Ft.)
Slope =    0.28408  s(percent)=      28.41
TC = k(0.530)*[(length^3)/(elevation change)]^0.2
Initial area time of concentration =    9.861 min.
Rainfall intensity =      3.848(In/Hr) for a   100.0 year storm
UNDEVELOPED (poor cover) subarea
Runoff Coefficient = 0.862
Decimal fraction soil group A = 0.150
Decimal fraction soil group B = 0.850
Decimal fraction soil group C = 0.000
Decimal fraction soil group D = 0.000
RI index for soil(AMC 3)  =  88.81
Pervious area fraction =  1.000; Impervious fraction =  0.000
Initial subarea runoff =     31.235(CFS)
Total initial stream area =        9.413(Ac.)
Pervious area fraction = 1.000


++++++++++++++++++++++++++++++++++++++++++++++++++++++++++++++++++++++
Process from Point/Station      401.000 to Point/Station      402.000
```

```
**** NATURAL CHANNEL TIME + SUBAREA FLOW ADDITION ****
_____________________________________________________________________
Top of natural channel elevation =   2263.900(Ft.)
End of natural channel elevation =   2225.400(Ft.)
Length of natural channel  =   629.800(Ft.)
Estimated mean flow rate at midpoint of channel =     43.621(CFS)

Natural valley channel type used
L.A. County flood control district formula for channel velocity:
 Velocity(ft/s) = (7 + 8(q(English Units)^.352)(slope^0.5)
Velocity using mean channel flow =   9.20(Ft/s)

Correction to map slope used on extremely rugged channels with
drops and waterfalls (Plate D-6.2)
       Normal channel slope =  0.0611
Corrected/adjusted channel slope =  0.0611
Travel time =    1.14 min.     TC =   11.00  min.


 Adding area flow to channel
UNDEVELOPED (poor cover) subarea
Runoff Coefficient = 0.854
Decimal fraction soil group A = 0.390
Decimal fraction soil group B = 0.610
Decimal fraction soil group C = 0.000
Decimal fraction soil group D = 0.000
RI index for soil(AMC 3)  =  87.23
Pervious area fraction =  1.000; Impervious fraction =  0.000
Rainfall intensity =      3.643(In/Hr) for a   100.0 year storm
Subarea runoff =     23.231(CFS) for      7.465(Ac.)
Total runoff =     54.466(CFS)   Total area =      16.878(Ac.)


++++++++++++++++++++++++++++++++++++++++++++++++++++++++++++++++++++++
Process from Point/Station      402.000 to Point/Station      403.000
**** PIPEFLOW TRAVEL TIME (Program estimated size) ****
_____________________________________________________________________
Upstream point/station elevation =  2225.400(Ft.)
Downstream point/station elevation =  2214.400(Ft.)
Pipe length  =   178.40(Ft.)   Manning's N = 0.013
No. of pipes = 1  Required pipe flow  =    54.466(CFS)
Nearest computed pipe diameter  =     24.00(In.)
Calculated individual pipe flow  =    54.466(CFS)
Normal flow depth in pipe =   19.03(In.)
Flow top width inside pipe =   19.45(In.)
Critical depth could not be calculated.
Pipe flow velocity =     20.37(Ft/s)
Travel time through pipe =    0.15 min.
Time of concentration (TC) =    11.15 min.
End of computations, total study area =           16.88 (Ac.)
The following figures may
be used for a unit hydrograph study of the same area.

Area averaged pervious area fraction(Ap) = 1.000
Area averaged RI index number =  75.2
```

```
                Riverside County Rational Hydrology Program

CIVILCADD/CIVILDESIGN Engineering Software,(c) 1989 - 2005 Version 7.1
        Rational Hydrology Study        Date: 04/21/22  File:PX450.out
----------------------------------------------------------------------
BEAUMONT POINTE
PRELIMINARY HYDROLOGY STUDY
AREA 450 EXISTING
100-YEAR
----------------------------------------------------------------------
 *********   Hydrology Study Control Information **********

 English (in-lb) Units used in input data file

----------------------------------------------------------------------


Program License Serial Number 6094

----------------------------------------------------------------------
Rational Method Hydrology Program based on
Riverside County Flood Control & Water Conservation District
1978 hydrology manual

Storm event (year) =  100.00 Antecedent Moisture Condition = 3

2 year, 1 hour precipitation =  0.551(In.)
100 year, 1 hour precipitation =  1.560(In.)

Storm event year = 100.0
Calculated rainfall intensity data:
1 hour intensity =  1.560(In/Hr)
Slope of intensity duration curve = 0.5000




++++++++++++++++++++++++++++++++++++++++++++++++++++++++++++++++++++++
Process from Point/Station      450.000 to Point/Station      451.000
**** INITIAL AREA EVALUATION ****
______________________________________________________________________
Initial area flow distance =   152.500(Ft.)
Top (of initial area) elevation =  2290.000(Ft.)
Bottom (of initial area) elevation =  2233.900(Ft.)
Difference in elevation =    56.100(Ft.)
Slope =    0.36787  s(percent)=      36.79
TC = k(0.530)*[(length^3)/(elevation change)]^0.2
Warning: TC computed to be less than 5 min.; program is assuming the
```

```
time of concentration is 5 minutes.
Initial area time of concentration =    5.000 min.
Rainfall intensity =      5.404(In/Hr) for a   100.0 year storm
UNDEVELOPED (poor cover) subarea
Runoff Coefficient = 0.875
Decimal fraction soil group A = 0.000
Decimal fraction soil group B = 1.000
Decimal fraction soil group C = 0.000
Decimal fraction soil group D = 0.000
RI index for soil(AMC 3)  =  89.80
Pervious area fraction =  1.000; Impervious fraction =  0.000
Initial subarea runoff =      1.803(CFS)
Total initial stream area =        0.381(Ac.)
Pervious area fraction = 1.000
End of computations, total study area =            0.38 (Ac.)
The following figures may
be used for a unit hydrograph study of the same area.

Area averaged pervious area fraction(Ap) = 1.000
Area averaged RI index number =  78.0
```

```
              Riverside County Rational Hydrology Program

CIVILCADD/CIVILDESIGN Engineering Software,(c) 1989 - 2005 Version 7.1
       Rational Hydrology Study        Date: 10/04/20  File:PX500.out
------------------------------------------------------------------------
BEAUMONT POINTE
PRELIMINARY HYDROLOGY STUDY
AREA 500 EXISTING
100-YEAR
------------------------------------------------------------------------
 *********   Hydrology Study Control Information **********

 English (in-lb) Units used in input data file

------------------------------------------------------------------------


Program License Serial Number 6094

------------------------------------------------------------------------
Rational Method Hydrology Program based on
Riverside County Flood Control & Water Conservation District
1978 hydrology manual

Storm event (year) =  100.00 Antecedent Moisture Condition = 3

2 year, 1 hour precipitation =  0.551(In.)
100 year, 1 hour precipitation =  1.560(In.)

Storm event year = 100.0
Calculated rainfall intensity data:
1 hour intensity =  1.560(In/Hr)
Slope of intensity duration curve = 0.5000




++++++++++++++++++++++++++++++++++++++++++++++++++++++++++++++++++++++
Process from Point/Station      500.000 to Point/Station      501.000
**** INITIAL AREA EVALUATION ****
______________________________________________________________________
Initial area flow distance =   981.000(Ft.)
Top (of initial area) elevation =  2390.100(Ft.)
Bottom (of initial area) elevation =  2222.300(Ft.)
Difference in elevation =   167.800(Ft.)
Slope =    0.17105  s(percent)=      17.10
TC = k(0.530)*[(length^3)/(elevation change)]^0.2
Initial area time of concentration =   11.866 min.
Rainfall intensity =      3.508(In/Hr) for a   100.0 year storm
UNDEVELOPED (poor cover) subarea
Runoff Coefficient = 0.858
Decimal fraction soil group A = 0.190
Decimal fraction soil group B = 0.810
Decimal fraction soil group C = 0.000
Decimal fraction soil group D = 0.000
RI index for soil(AMC 3)  =  88.55
Pervious area fraction =  1.000; Impervious fraction =  0.000
Initial subarea runoff =     16.367(CFS)
Total initial stream area =        5.439(Ac.)
Pervious area fraction = 1.000


++++++++++++++++++++++++++++++++++++++++++++++++++++++++++++++++++++++
Process from Point/Station      501.000 to Point/Station      502.000
```

```
**** PIPEFLOW TRAVEL TIME (Program estimated size) ****
_____________________________________________________________________
Upstream point/station elevation =  2222.300(Ft.)
Downstream point/station elevation =  2215.500(Ft.)
Pipe length  =   190.70(Ft.)   Manning's N = 0.013
No. of pipes = 1  Required pipe flow  =    16.367(CFS)
Nearest computed pipe diameter  =     18.00(In.)
Calculated individual pipe flow  =    16.367(CFS)
Normal flow depth in pipe =   12.47(In.)
Flow top width inside pipe =   16.61(In.)
Critical depth could not be calculated.
Pipe flow velocity =     12.54(Ft/s)
Travel time through pipe =    0.25 min.
Time of concentration (TC) =    12.12 min.
End of computations, total study area =            5.44 (Ac.)
The following figures may
be used for a unit hydrograph study of the same area.

Area averaged pervious area fraction(Ap) = 1.000
Area averaged RI index number =  75.9
```

```
              Riverside County Rational Hydrology Program

CIVILCADD/CIVILDESIGN Engineering Software,(c) 1989 - 2005 Version 7.1
       Rational Hydrology Study        Date: 10/04/20  File:PX600.out
------------------------------------------------------------------------
BEAUMONT POINTE
PRELIMINARY HYDROLOGY STUDY
AREA 600 EXISTING
100-YEAR
------------------------------------------------------------------------
 *********   Hydrology Study Control Information **********

 English (in-lb) Units used in input data file

------------------------------------------------------------------------


Program License Serial Number 6094

------------------------------------------------------------------------
Rational Method Hydrology Program based on
Riverside County Flood Control & Water Conservation District
1978 hydrology manual

Storm event (year) =  100.00 Antecedent Moisture Condition = 3

2 year, 1 hour precipitation =  0.551(In.)
100 year, 1 hour precipitation =  1.560(In.)

Storm event year = 100.0
Calculated rainfall intensity data:
1 hour intensity =  1.560(In/Hr)
Slope of intensity duration curve = 0.5000




++++++++++++++++++++++++++++++++++++++++++++++++++++++++++++++++++++++
Process from Point/Station      600.000 to Point/Station      601.000
**** INITIAL AREA EVALUATION ****
______________________________________________________________________
Initial area flow distance =   841.500(Ft.)
Top (of initial area) elevation =  2480.300(Ft.)
Bottom (of initial area) elevation =  2300.000(Ft.)
Difference in elevation =   180.300(Ft.)
Slope =    0.21426  s(percent)=      21.43
TC = k(0.530)*[(length^3)/(elevation change)]^0.2
Initial area time of concentration =   10.669 min.
Rainfall intensity =      3.700(In/Hr) for a   100.0 year storm
UNDEVELOPED (poor cover) subarea
Runoff Coefficient = 0.864
Decimal fraction soil group A = 0.120
Decimal fraction soil group B = 0.790
Decimal fraction soil group C = 0.000
Decimal fraction soil group D = 0.090
RI index for soil(AMC 3)  =  89.60
Pervious area fraction =  1.000; Impervious fraction =  0.000
Initial subarea runoff =     26.075(CFS)
Total initial stream area =        8.159(Ac.)
Pervious area fraction = 1.000


++++++++++++++++++++++++++++++++++++++++++++++++++++++++++++++++++++++
Process from Point/Station      601.000 to Point/Station      602.000
```

```
**** NATURAL CHANNEL TIME + SUBAREA FLOW ADDITION ****
_____________________________________________________________________
Top of natural channel elevation =   2300.000(Ft.)
End of natural channel elevation =   2250.000(Ft.)
Length of natural channel  =   801.400(Ft.)
Estimated mean flow rate at midpoint of channel =     64.016(CFS)

Natural valley channel type used
L.A. County flood control district formula for channel velocity:
 Velocity(ft/s) = (7 + 8(q(English Units)^.352)(slope^0.5)
Velocity using mean channel flow =  10.39(Ft/s)

Correction to map slope used on extremely rugged channels with
drops and waterfalls (Plate D-6.2)
       Normal channel slope =  0.0624
Corrected/adjusted channel slope =  0.0624
Travel time =    1.29 min.     TC =   11.95  min.


 Adding area flow to channel
UNDEVELOPED (poor cover) subarea
Runoff Coefficient = 0.855
Decimal fraction soil group A = 0.320
Decimal fraction soil group B = 0.650
Decimal fraction soil group C = 0.000
Decimal fraction soil group D = 0.030
RI index for soil(AMC 3)  =  87.89
Pervious area fraction =  1.000; Impervious fraction =  0.000
Rainfall intensity =      3.495(In/Hr) for a   100.0 year storm
Subarea runoff =     70.950(CFS) for     23.743(Ac.)
Total runoff =     97.026(CFS)   Total area =      31.902(Ac.)


++++++++++++++++++++++++++++++++++++++++++++++++++++++++++++++++++++++
Process from Point/Station      602.000 to Point/Station      603.000
**** NATURAL CHANNEL TIME + SUBAREA FLOW ADDITION ****
_____________________________________________________________________
Top of natural channel elevation =   2250.000(Ft.)
End of natural channel elevation =   2230.000(Ft.)
Length of natural channel  =   426.700(Ft.)
Estimated mean flow rate at midpoint of channel =    124.952(CFS)

Natural valley channel type used
L.A. County flood control district formula for channel velocity:
 Velocity(ft/s) = (7 + 8(q(English Units)^.352)(slope^0.5)
Velocity using mean channel flow =  10.99(Ft/s)

Correction to map slope used on extremely rugged channels with
drops and waterfalls (Plate D-6.2)
       Normal channel slope =  0.0469
Corrected/adjusted channel slope =  0.0469
Travel time =    0.65 min.     TC =   12.60  min.


 Adding area flow to channel
UNDEVELOPED (poor cover) subarea
Runoff Coefficient = 0.851
Decimal fraction soil group A = 0.390
Decimal fraction soil group B = 0.610
Decimal fraction soil group C = 0.000
Decimal fraction soil group D = 0.000
RI index for soil(AMC 3)  =  87.23
Pervious area fraction =  1.000; Impervious fraction =  0.000
Rainfall intensity =      3.404(In/Hr) for a   100.0 year storm
Subarea runoff =     53.208(CFS) for     18.364(Ac.)
Total runoff =    150.233(CFS)   Total area =      50.266(Ac.)
```

```
++++++++++++++++++++++++++++++++++++++++++++++++++++++++++++++++++++++
Process from Point/Station      603.000 to Point/Station      604.000
**** NATURAL CHANNEL TIME + SUBAREA FLOW ADDITION ****
______________________________________________________________________
Top of natural channel elevation =   2230.000(Ft.)
End of natural channel elevation =   2225.200(Ft.)
Length of natural channel  =    75.600(Ft.)
Estimated mean flow rate at midpoint of channel =    155.597(CFS)

Natural valley channel type used
L.A. County flood control district formula for channel velocity:
 Velocity(ft/s) = (7 + 8(q(English Units)^.352)(slope^0.5)
Velocity using mean channel flow =  13.68(Ft/s)

Correction to map slope used on extremely rugged channels with
drops and waterfalls (Plate D-6.2)
       Normal channel slope =  0.0635
Corrected/adjusted channel slope =  0.0635
Travel time =    0.09 min.     TC =   12.69  min.


 Adding area flow to channel
UNDEVELOPED (poor cover) subarea
Runoff Coefficient = 0.845
Decimal fraction soil group A = 0.590
Decimal fraction soil group B = 0.410
Decimal fraction soil group C = 0.000
Decimal fraction soil group D = 0.000
RI index for soil(AMC 3)  =  85.91
Pervious area fraction =  1.000; Impervious fraction =  0.000
Rainfall intensity =      3.392(In/Hr) for a   100.0 year storm
Subarea runoff =     10.291(CFS) for      3.589(Ac.)
Total runoff =    160.525(CFS)   Total area =      53.855(Ac.)


++++++++++++++++++++++++++++++++++++++++++++++++++++++++++++++++++++++
Process from Point/Station      604.000 to Point/Station      605.000
**** PIPEFLOW TRAVEL TIME (Program estimated size) ****
______________________________________________________________________
Upstream point/station elevation =  2225.200(Ft.)
Downstream point/station elevation =  2222.100(Ft.)
Pipe length  =   154.60(Ft.)   Manning's N = 0.013
No. of pipes = 1  Required pipe flow  =   160.525(CFS)
Nearest computed pipe diameter  =     45.00(In.)
Calculated individual pipe flow  =   160.525(CFS)
Normal flow depth in pipe =   34.59(In.)
Flow top width inside pipe =   37.95(In.)
Critical depth could not be calculated.
Pipe flow velocity =     17.62(Ft/s)
Travel time through pipe =    0.15 min.
Time of concentration (TC) =    12.84 min.
End of computations, total study area =           53.86 (Ac.)
The following figures may
be used for a unit hydrograph study of the same area.

Area averaged pervious area fraction(Ap) = 1.000
Area averaged RI index number =  74.6
```

```
              Riverside County Rational Hydrology Program

CIVILCADD/CIVILDESIGN Engineering Software,(c) 1989 - 2005 Version 7.1
       Rational Hydrology Study        Date: 10/04/20  File:PX700.out
------------------------------------------------------------------------
BEAUMONT POINTE
PRELIMINARY HYDROLOGY STUDY
AREA 700 EXISTING
100-YEAR
------------------------------------------------------------------------
 *********   Hydrology Study Control Information **********

 English (in-lb) Units used in input data file

------------------------------------------------------------------------


Program License Serial Number 6094

------------------------------------------------------------------------
Rational Method Hydrology Program based on
Riverside County Flood Control & Water Conservation District
1978 hydrology manual

Storm event (year) =  100.00 Antecedent Moisture Condition = 3

2 year, 1 hour precipitation =  0.551(In.)
100 year, 1 hour precipitation =  1.560(In.)

Storm event year = 100.0
Calculated rainfall intensity data:
1 hour intensity =  1.560(In/Hr)
Slope of intensity duration curve = 0.5000




++++++++++++++++++++++++++++++++++++++++++++++++++++++++++++++++++++++
Process from Point/Station      700.000 to Point/Station      701.000
**** INITIAL AREA EVALUATION ****
______________________________________________________________________
Initial area flow distance =   777.500(Ft.)
Top (of initial area) elevation =  2400.000(Ft.)
Bottom (of initial area) elevation =  2240.100(Ft.)
Difference in elevation =   159.900(Ft.)
Slope =    0.20566  s(percent)=      20.57
TC = k(0.530)*[(length^3)/(elevation change)]^0.2
Initial area time of concentration =   10.421 min.
Rainfall intensity =      3.743(In/Hr) for a   100.0 year storm
UNDEVELOPED (poor cover) subarea
Runoff Coefficient = 0.861
Decimal fraction soil group A = 0.160
Decimal fraction soil group B = 0.840
Decimal fraction soil group C = 0.000
Decimal fraction soil group D = 0.000
RI index for soil(AMC 3)  =  88.74
Pervious area fraction =  1.000; Impervious fraction =  0.000
Initial subarea runoff =     14.314(CFS)
Total initial stream area =        4.441(Ac.)
Pervious area fraction = 1.000


++++++++++++++++++++++++++++++++++++++++++++++++++++++++++++++++++++++
Process from Point/Station      701.000 to Point/Station      702.000
```

```
**** PIPEFLOW TRAVEL TIME (Program estimated size) ****
_____________________________________________________________________
Upstream point/station elevation =  2240.100(Ft.)
Downstream point/station elevation =  2228.700(Ft.)
Pipe length  =   144.20(Ft.)   Manning's N = 0.013
No. of pipes = 1  Required pipe flow  =    14.314(CFS)
Nearest computed pipe diameter  =     15.00(In.)
Calculated individual pipe flow  =    14.314(CFS)
Normal flow depth in pipe =   10.04(In.)
Flow top width inside pipe =   14.11(In.)
Critical depth could not be calculated.
Pipe flow velocity =     16.40(Ft/s)
Travel time through pipe =    0.15 min.
Time of concentration (TC) =    10.57 min.
End of computations, total study area =            4.44 (Ac.)
The following figures may
be used for a unit hydrograph study of the same area.

Area averaged pervious area fraction(Ap) = 1.000
Area averaged RI index number =  76.2
```

```
              Riverside County Rational Hydrology Program

CIVILCADD/CIVILDESIGN Engineering Software,(c) 1989 - 2005 Version 7.1
       Rational Hydrology Study        Date: 10/04/20  File:PX800.out
------------------------------------------------------------------------
BEAUMONT POINTE
PRELIMINARY HYDROLOGY STUDY
AREA 800 EXISTING
100-YEAR
------------------------------------------------------------------------
 *********   Hydrology Study Control Information **********

 English (in-lb) Units used in input data file

------------------------------------------------------------------------


Program License Serial Number 6094

------------------------------------------------------------------------
Rational Method Hydrology Program based on
Riverside County Flood Control & Water Conservation District
1978 hydrology manual

Storm event (year) =  100.00 Antecedent Moisture Condition = 3

2 year, 1 hour precipitation =  0.551(In.)
100 year, 1 hour precipitation =  1.560(In.)

Storm event year = 100.0
Calculated rainfall intensity data:
1 hour intensity =  1.560(In/Hr)
Slope of intensity duration curve = 0.5000




++++++++++++++++++++++++++++++++++++++++++++++++++++++++++++++++++++++
Process from Point/Station      800.000 to Point/Station      801.000
**** INITIAL AREA EVALUATION ****
______________________________________________________________________
Initial area flow distance =   834.500(Ft.)
Top (of initial area) elevation =  2430.000(Ft.)
Bottom (of initial area) elevation =  2243.400(Ft.)
Difference in elevation =   186.600(Ft.)
Slope =    0.22361  s(percent)=      22.36
TC = k(0.530)*[(length^3)/(elevation change)]^0.2
Initial area time of concentration =   10.543 min.
Rainfall intensity =      3.722(In/Hr) for a   100.0 year storm
UNDEVELOPED (poor cover) subarea
Runoff Coefficient = 0.861
Decimal fraction soil group A = 0.140
Decimal fraction soil group B = 0.860
Decimal fraction soil group C = 0.000
Decimal fraction soil group D = 0.000
RI index for soil(AMC 3)  =  88.88
Pervious area fraction =  1.000; Impervious fraction =  0.000
Initial subarea runoff =     22.568(CFS)
Total initial stream area =        7.040(Ac.)
Pervious area fraction = 1.000


++++++++++++++++++++++++++++++++++++++++++++++++++++++++++++++++++++++
Process from Point/Station      801.000 to Point/Station      802.000
```

```
**** PIPEFLOW TRAVEL TIME (Program estimated size) ****
_____________________________________________________________________
Upstream point/station elevation =  2243.400(Ft.)
Downstream point/station elevation =  2234.700(Ft.)
Pipe length  =   146.40(Ft.)   Manning's N = 0.013
No. of pipes = 1  Required pipe flow  =    22.568(CFS)
Nearest computed pipe diameter  =     18.00(In.)
Calculated individual pipe flow  =    22.568(CFS)
Normal flow depth in pipe =   13.13(In.)
Flow top width inside pipe =   16.00(In.)
Critical depth could not be calculated.
Pipe flow velocity =     16.35(Ft/s)
Travel time through pipe =    0.15 min.
Time of concentration (TC) =    10.69 min.
End of computations, total study area =            7.04 (Ac.)
The following figures may
be used for a unit hydrograph study of the same area.

Area averaged pervious area fraction(Ap) = 1.000
Area averaged RI index number =  76.5
```

```
              Riverside County Rational Hydrology Program

CIVILCADD/CIVILDESIGN Engineering Software,(c) 1989 - 2005 Version 7.1
       Rational Hydrology Study        Date: 10/04/20  File:PX900.out
------------------------------------------------------------------------
BEAUMONT POINTE
PRELIMINARY HYDROLOGY STUDY
AREA 900 EXISTING
100-YEAR
------------------------------------------------------------------------
 *********   Hydrology Study Control Information **********

 English (in-lb) Units used in input data file

------------------------------------------------------------------------


Program License Serial Number 6094

------------------------------------------------------------------------
Rational Method Hydrology Program based on
Riverside County Flood Control & Water Conservation District
1978 hydrology manual

Storm event (year) =  100.00 Antecedent Moisture Condition = 3

2 year, 1 hour precipitation =  0.551(In.)
100 year, 1 hour precipitation =  1.560(In.)

Storm event year = 100.0
Calculated rainfall intensity data:
1 hour intensity =  1.560(In/Hr)
Slope of intensity duration curve = 0.5000




++++++++++++++++++++++++++++++++++++++++++++++++++++++++++++++++++++++
Process from Point/Station      900.000 to Point/Station      901.000
**** INITIAL AREA EVALUATION ****
______________________________________________________________________
Initial area flow distance =   528.600(Ft.)
Top (of initial area) elevation =  2440.000(Ft.)
Bottom (of initial area) elevation =  2280.200(Ft.)
Difference in elevation =   159.800(Ft.)
Slope =    0.30231  s(percent)=      30.23
TC = k(0.530)*[(length^3)/(elevation change)]^0.2
Initial area time of concentration =    8.269 min.
Rainfall intensity =      4.202(In/Hr) for a   100.0 year storm
UNDEVELOPED (poor cover) subarea
Runoff Coefficient = 0.869
Decimal fraction soil group A = 0.000
Decimal fraction soil group B = 1.000
Decimal fraction soil group C = 0.000
Decimal fraction soil group D = 0.000
RI index for soil(AMC 3)  =  89.80
Pervious area fraction =  1.000; Impervious fraction =  0.000
Initial subarea runoff =     14.160(CFS)
Total initial stream area =        3.879(Ac.)
Pervious area fraction = 1.000


++++++++++++++++++++++++++++++++++++++++++++++++++++++++++++++++++++++
Process from Point/Station      901.000 to Point/Station      902.000
```

```
**** NATURAL CHANNEL TIME + SUBAREA FLOW ADDITION ****
_____________________________________________________________________
Top of natural channel elevation =   2280.200(Ft.)
End of natural channel elevation =   2241.600(Ft.)
Length of natural channel  =   439.600(Ft.)
Estimated mean flow rate at midpoint of channel =     32.854(CFS)

Natural valley channel type used
L.A. County flood control district formula for channel velocity:
 Velocity(ft/s) = (7 + 8(q(English Units)^.352)(slope^0.5)
Velocity using mean channel flow =  10.18(Ft/s)

Correction to map slope used on extremely rugged channels with
drops and waterfalls (Plate D-6.2)
       Normal channel slope =  0.0878
Corrected/adjusted channel slope =  0.0878
Travel time =    0.72 min.     TC =    8.99  min.


 Adding area flow to channel
UNDEVELOPED (poor cover) subarea
Runoff Coefficient = 0.862
Decimal fraction soil group A = 0.230
Decimal fraction soil group B = 0.770
Decimal fraction soil group C = 0.000
Decimal fraction soil group D = 0.000
RI index for soil(AMC 3)  =  88.28
Pervious area fraction =  1.000; Impervious fraction =  0.000
Rainfall intensity =      4.030(In/Hr) for a   100.0 year storm
Subarea runoff =     35.589(CFS) for     10.242(Ac.)
Total runoff =     49.749(CFS)   Total area =      14.121(Ac.)


++++++++++++++++++++++++++++++++++++++++++++++++++++++++++++++++++++++
Process from Point/Station      902.000 to Point/Station      903.000
**** PIPEFLOW TRAVEL TIME (Program estimated size) ****
_____________________________________________________________________
Upstream point/station elevation =  2241.600(Ft.)
Downstream point/station elevation =  2236.100(Ft.)
Pipe length  =   166.00(Ft.)   Manning's N = 0.013
No. of pipes = 1  Required pipe flow  =    49.749(CFS)
Nearest computed pipe diameter  =     27.00(In.)
Calculated individual pipe flow  =    49.749(CFS)
Normal flow depth in pipe =   19.69(In.)
Flow top width inside pipe =   24.00(In.)
Critical depth could not be calculated.
Pipe flow velocity =     16.00(Ft/s)
Travel time through pipe =    0.17 min.
Time of concentration (TC) =     9.16 min.
End of computations, total study area =           14.12 (Ac.)
The following figures may
be used for a unit hydrograph study of the same area.

Area averaged pervious area fraction(Ap) = 1.000
Area averaged RI index number =  76.2
```

```
              Riverside County Rational Hydrology Program

CIVILCADD/CIVILDESIGN Engineering Software,(c) 1989 - 2005 Version 7.1
       Rational Hydrology Study        Date: 10/04/20  File:PX1000.out
------------------------------------------------------------------------
BEAUMONT POINTE
PRELIMINARY HYDROLOGY STUDY
AREA 1000 EXISTING
100-YEAR
------------------------------------------------------------------------
 *********   Hydrology Study Control Information **********

 English (in-lb) Units used in input data file

------------------------------------------------------------------------


Program License Serial Number 6094

------------------------------------------------------------------------
Rational Method Hydrology Program based on
Riverside County Flood Control & Water Conservation District
1978 hydrology manual

Storm event (year) =  100.00 Antecedent Moisture Condition = 3

2 year, 1 hour precipitation =  0.551(In.)
100 year, 1 hour precipitation =  1.560(In.)

Storm event year = 100.0
Calculated rainfall intensity data:
1 hour intensity =  1.560(In/Hr)
Slope of intensity duration curve = 0.5000




++++++++++++++++++++++++++++++++++++++++++++++++++++++++++++++++++++++
Process from Point/Station     1000.000 to Point/Station     1001.000
**** INITIAL AREA EVALUATION ****
______________________________________________________________________
Initial area flow distance =   233.700(Ft.)
Top (of initial area) elevation =  2430.000(Ft.)
Bottom (of initial area) elevation =  2258.500(Ft.)
Difference in elevation =   171.500(Ft.)
Slope =    0.73385  s(percent)=      73.38
TC = k(0.530)*[(length^3)/(elevation change)]^0.2
Warning: TC computed to be less than 5 min.; program is assuming the
time of concentration is 5 minutes.
Initial area time of concentration =    5.000 min.
Rainfall intensity =      5.404(In/Hr) for a   100.0 year storm
UNDEVELOPED (poor cover) subarea
Runoff Coefficient = 0.875
Decimal fraction soil group A = 0.000
Decimal fraction soil group B = 1.000
Decimal fraction soil group C = 0.000
Decimal fraction soil group D = 0.000
RI index for soil(AMC 3)  =  89.80
Pervious area fraction =  1.000; Impervious fraction =  0.000
Initial subarea runoff =      2.247(CFS)
Total initial stream area =        0.475(Ac.)
Pervious area fraction = 1.000
```

```
++++++++++++++++++++++++++++++++++++++++++++++++++++++++++++++++++++++
Process from Point/Station     1001.000 to Point/Station     1002.000
**** PIPEFLOW TRAVEL TIME (Program estimated size) ****
______________________________________________________________________
Upstream point/station elevation =  2258.500(Ft.)
Downstream point/station elevation =  2237.100(Ft.)
Pipe length  =   156.80(Ft.)   Manning's N = 0.013
No. of pipes = 1  Required pipe flow  =     2.247(CFS)
Nearest computed pipe diameter  =      9.00(In.)
Calculated individual pipe flow  =     2.247(CFS)
Normal flow depth in pipe =    3.78(In.)
Flow top width inside pipe =    8.88(In.)
Critical Depth =    8.05(In.)
Pipe flow velocity =     12.77(Ft/s)
Travel time through pipe =    0.20 min.
Time of concentration (TC) =     5.20 min.
End of computations, total study area =            0.47 (Ac.)
The following figures may
be used for a unit hydrograph study of the same area.

Area averaged pervious area fraction(Ap) = 1.000
Area averaged RI index number =  78.0
```

```
              Riverside County Rational Hydrology Program

CIVILCADD/CIVILDESIGN Engineering Software,(c) 1989 - 2005 Version 7.1
       Rational Hydrology Study        Date: 10/04/20  File:PX1100.out
------------------------------------------------------------------------
BEAUMONT POINTE
PRELIMINARY HYDROLOGY STUDY
AREA 1100 EXISTING
100-YEAR
------------------------------------------------------------------------
 *********   Hydrology Study Control Information **********

 English (in-lb) Units used in input data file

------------------------------------------------------------------------


Program License Serial Number 6094

------------------------------------------------------------------------
Rational Method Hydrology Program based on
Riverside County Flood Control & Water Conservation District
1978 hydrology manual

Storm event (year) =  100.00 Antecedent Moisture Condition = 3

2 year, 1 hour precipitation =  0.551(In.)
100 year, 1 hour precipitation =  1.560(In.)

Storm event year = 100.0
Calculated rainfall intensity data:
1 hour intensity =  1.560(In/Hr)
Slope of intensity duration curve = 0.5000




++++++++++++++++++++++++++++++++++++++++++++++++++++++++++++++++++++++
Process from Point/Station     1100.000 to Point/Station     1101.000
**** INITIAL AREA EVALUATION ****
______________________________________________________________________
Initial area flow distance =   960.500(Ft.)
Top (of initial area) elevation =  2470.000(Ft.)
Bottom (of initial area) elevation =  2340.000(Ft.)
Difference in elevation =   130.000(Ft.)
Slope =    0.13535  s(percent)=      13.53
TC = k(0.530)*[(length^3)/(elevation change)]^0.2
Initial area time of concentration =   12.331 min.
Rainfall intensity =      3.441(In/Hr) for a   100.0 year storm
UNDEVELOPED (poor cover) subarea
Runoff Coefficient = 0.861
Decimal fraction soil group A = 0.320
Decimal fraction soil group B = 0.410
Decimal fraction soil group C = 0.000
Decimal fraction soil group D = 0.270
RI index for soil(AMC 3)  =  89.47
Pervious area fraction =  1.000; Impervious fraction =  0.000
Initial subarea runoff =     17.704(CFS)
Total initial stream area =        5.977(Ac.)
Pervious area fraction = 1.000


++++++++++++++++++++++++++++++++++++++++++++++++++++++++++++++++++++++
Process from Point/Station     1101.000 to Point/Station     1102.000
```

```
**** NATURAL CHANNEL TIME + SUBAREA FLOW ADDITION ****
____________________________________________________________________
Top of natural channel elevation =   2340.000(Ft.)
End of natural channel elevation =   2270.000(Ft.)
Length of natural channel  =  1224.400(Ft.)
Estimated mean flow rate at midpoint of channel =     79.906(CFS)

Natural valley channel type used
L.A. County flood control district formula for channel velocity:
 Velocity(ft/s) = (7 + 8(q(English Units)^.352)(slope^0.5)
Velocity using mean channel flow =  10.61(Ft/s)

Correction to map slope used on extremely rugged channels with
drops and waterfalls (Plate D-6.2)
       Normal channel slope =  0.0572
Corrected/adjusted channel slope =  0.0572
Travel time =    1.92 min.     TC =   14.25  min.


 Adding area flow to channel
UNDEVELOPED (poor cover) subarea
Runoff Coefficient = 0.857
Decimal fraction soil group A = 0.270
Decimal fraction soil group B = 0.560
Decimal fraction soil group C = 0.000
Decimal fraction soil group D = 0.170
RI index for soil(AMC 3)  =  89.14
Pervious area fraction =  1.000; Impervious fraction =  0.000
Rainfall intensity =      3.201(In/Hr) for a   100.0 year storm
Subarea runoff =    115.143(CFS) for     42.000(Ac.)
Total runoff =    132.847(CFS)   Total area =      47.977(Ac.)


++++++++++++++++++++++++++++++++++++++++++++++++++++++++++++++++++++++
Process from Point/Station     1102.000 to Point/Station     1103.000
**** NATURAL CHANNEL TIME + SUBAREA FLOW ADDITION ****
____________________________________________________________________
Top of natural channel elevation =   2270.000(Ft.)
End of natural channel elevation =   2246.900(Ft.)
Length of natural channel  =   889.600(Ft.)
Estimated mean flow rate at midpoint of channel =    175.867(CFS)

Natural valley channel type used
L.A. County flood control district formula for channel velocity:
 Velocity(ft/s) = (7 + 8(q(English Units)^.352)(slope^0.5)
Velocity using mean channel flow =   9.08(Ft/s)

Correction to map slope used on extremely rugged channels with
drops and waterfalls (Plate D-6.2)
       Normal channel slope =  0.0260
Corrected/adjusted channel slope =  0.0260
Travel time =    1.63 min.     TC =   15.89  min.


 Adding area flow to channel
UNDEVELOPED (poor cover) subarea
Runoff Coefficient = 0.846
Decimal fraction soil group A = 0.390
Decimal fraction soil group B = 0.590
Decimal fraction soil group C = 0.000
Decimal fraction soil group D = 0.020
RI index for soil(AMC 3)  =  87.36
Pervious area fraction =  1.000; Impervious fraction =  0.000
Rainfall intensity =      3.032(In/Hr) for a   100.0 year storm
Subarea runoff =     79.713(CFS) for     31.073(Ac.)
Total runoff =    212.559(CFS)   Total area =      79.050(Ac.)
```

```
++++++++++++++++++++++++++++++++++++++++++++++++++++++++++++++++++++++
Process from Point/Station     1103.000 to Point/Station     1104.000
**** PIPEFLOW TRAVEL TIME (Program estimated size) ****
______________________________________________________________________
Upstream point/station elevation =  2246.900(Ft.)
Downstream point/station elevation =  2246.300(Ft.)
Pipe length  =   160.10(Ft.)   Manning's N = 0.013
No. of pipes = 1  Required pipe flow  =   212.559(CFS)
Nearest computed pipe diameter  =     66.00(In.)
Calculated individual pipe flow  =   212.559(CFS)
Normal flow depth in pipe =   56.44(In.)
Flow top width inside pipe =   46.46(In.)
Critical Depth =   48.93(In.)
Pipe flow velocity =      9.84(Ft/s)
Travel time through pipe =    0.27 min.
Time of concentration (TC) =    16.16 min.
End of computations, total study area =           79.05 (Ac.)
The following figures may
be used for a unit hydrograph study of the same area.

Area averaged pervious area fraction(Ap) = 1.000
Area averaged RI index number =  75.8
```

```
              Riverside County Rational Hydrology Program

CIVILCADD/CIVILDESIGN Engineering Software,(c) 1989 - 2005 Version 7.1
       Rational Hydrology Study        Date: 10/04/20  File:PX1200.out
------------------------------------------------------------------------
BEAUMONT POINTE
PRELIMINARY HYDROLOGY STUDY
AREA 1200 EXISTING
100-YEAR
------------------------------------------------------------------------
 *********   Hydrology Study Control Information **********

 English (in-lb) Units used in input data file

------------------------------------------------------------------------


Program License Serial Number 6094

------------------------------------------------------------------------
Rational Method Hydrology Program based on
Riverside County Flood Control & Water Conservation District
1978 hydrology manual

Storm event (year) =  100.00 Antecedent Moisture Condition = 3

2 year, 1 hour precipitation =  0.551(In.)
100 year, 1 hour precipitation =  1.560(In.)

Storm event year = 100.0
Calculated rainfall intensity data:
1 hour intensity =  1.560(In/Hr)
Slope of intensity duration curve = 0.5000




++++++++++++++++++++++++++++++++++++++++++++++++++++++++++++++++++++++
Process from Point/Station     1200.000 to Point/Station     1201.000
**** INITIAL AREA EVALUATION ****
______________________________________________________________________
Initial area flow distance =   491.100(Ft.)
Top (of initial area) elevation =  2370.400(Ft.)
Bottom (of initial area) elevation =  2269.500(Ft.)
Difference in elevation =   100.900(Ft.)
Slope =    0.20546  s(percent)=      20.55
TC = k(0.530)*[(length^3)/(elevation change)]^0.2
Initial area time of concentration =    8.674 min.
Rainfall intensity =      4.103(In/Hr) for a   100.0 year storm
UNDEVELOPED (poor cover) subarea
Runoff Coefficient = 0.860
Decimal fraction soil group A = 0.370
Decimal fraction soil group B = 0.630
Decimal fraction soil group C = 0.000
Decimal fraction soil group D = 0.000
RI index for soil(AMC 3)  =  87.36
Pervious area fraction =  1.000; Impervious fraction =  0.000
Initial subarea runoff =     10.531(CFS)
Total initial stream area =        2.986(Ac.)
Pervious area fraction = 1.000


++++++++++++++++++++++++++++++++++++++++++++++++++++++++++++++++++++++
Process from Point/Station     1201.000 to Point/Station     1202.000
```

```
**** PIPEFLOW TRAVEL TIME (Program estimated size) ****
_____________________________________________________________________
Upstream point/station elevation =  2269.500(Ft.)
Downstream point/station elevation =  2259.500(Ft.)
Pipe length  =   109.30(Ft.)   Manning's N = 0.013
No. of pipes = 1  Required pipe flow  =    10.531(CFS)
Nearest computed pipe diameter  =     12.00(In.)
Calculated individual pipe flow  =    10.531(CFS)
Normal flow depth in pipe =    9.60(In.)
Flow top width inside pipe =    9.60(In.)
Critical depth could not be calculated.
Pipe flow velocity =     15.64(Ft/s)
Travel time through pipe =    0.12 min.
Time of concentration (TC) =     8.79 min.
End of computations, total study area =            2.99 (Ac.)
The following figures may
be used for a unit hydrograph study of the same area.

Area averaged pervious area fraction(Ap) = 1.000
Area averaged RI index number =  73.9
```

```
              Riverside County Rational Hydrology Program

CIVILCADD/CIVILDESIGN Engineering Software,(c) 1989 - 2005 Version 7.1
       Rational Hydrology Study        Date: 10/04/20  File:PX1300.out
------------------------------------------------------------------------
BEAUMONT POINTE
PRELIMINARY HYDROLOGY STUDY
AREA 1300 EXISTING
100-YEAR
------------------------------------------------------------------------
 *********   Hydrology Study Control Information **********

 English (in-lb) Units used in input data file

------------------------------------------------------------------------


Program License Serial Number 6094

------------------------------------------------------------------------
Rational Method Hydrology Program based on
Riverside County Flood Control & Water Conservation District
1978 hydrology manual

Storm event (year) =  100.00 Antecedent Moisture Condition = 3

2 year, 1 hour precipitation =  0.551(In.)
100 year, 1 hour precipitation =  1.560(In.)

Storm event year = 100.0
Calculated rainfall intensity data:
1 hour intensity =  1.560(In/Hr)
Slope of intensity duration curve = 0.5000




++++++++++++++++++++++++++++++++++++++++++++++++++++++++++++++++++++++
Process from Point/Station     1300.000 to Point/Station     1301.000
**** INITIAL AREA EVALUATION ****
______________________________________________________________________
Initial area flow distance =   533.500(Ft.)
Top (of initial area) elevation =  2500.000(Ft.)
Bottom (of initial area) elevation =  2390.000(Ft.)
Difference in elevation =   110.000(Ft.)
Slope =    0.20619  s(percent)=      20.62
TC = k(0.530)*[(length^3)/(elevation change)]^0.2
Initial area time of concentration =    8.959 min.
Rainfall intensity =      4.037(In/Hr) for a   100.0 year storm
UNDEVELOPED (poor cover) subarea
Runoff Coefficient = 0.867
Decimal fraction soil group A = 0.000
Decimal fraction soil group B = 1.000
Decimal fraction soil group C = 0.000
Decimal fraction soil group D = 0.000
RI index for soil(AMC 3)  =  89.80
Pervious area fraction =  1.000; Impervious fraction =  0.000
Initial subarea runoff =      8.912(CFS)
Total initial stream area =        2.545(Ac.)
Pervious area fraction = 1.000


++++++++++++++++++++++++++++++++++++++++++++++++++++++++++++++++++++++
Process from Point/Station     1301.000 to Point/Station     1302.000
```

```
**** NATURAL CHANNEL TIME + SUBAREA FLOW ADDITION ****
_____________________________________________________________________
Top of natural channel elevation =   2390.000(Ft.)
End of natural channel elevation =   2300.000(Ft.)
Length of natural channel  =  1273.800(Ft.)
Estimated mean flow rate at midpoint of channel =     34.762(CFS)

Natural valley channel type used
L.A. County flood control district formula for channel velocity:
 Velocity(ft/s) = (7 + 8(q(English Units)^.352)(slope^0.5)
Velocity using mean channel flow =   9.28(Ft/s)

Correction to map slope used on extremely rugged channels with
drops and waterfalls (Plate D-6.2)
       Normal channel slope =  0.0707
Corrected/adjusted channel slope =  0.0707
Travel time =    2.29 min.     TC =   11.25  min.


 Adding area flow to channel
UNDEVELOPED (poor cover) subarea
Runoff Coefficient = 0.854
Decimal fraction soil group A = 0.370
Decimal fraction soil group B = 0.630
Decimal fraction soil group C = 0.000
Decimal fraction soil group D = 0.000
RI index for soil(AMC 3)  =  87.36
Pervious area fraction =  1.000; Impervious fraction =  0.000
Rainfall intensity =      3.603(In/Hr) for a   100.0 year storm
Subarea runoff =     45.438(CFS) for     14.763(Ac.)
Total runoff =     54.351(CFS)   Total area =      17.308(Ac.)


++++++++++++++++++++++++++++++++++++++++++++++++++++++++++++++++++++++
Process from Point/Station     1302.000 to Point/Station     1303.000
**** NATURAL CHANNEL TIME + SUBAREA FLOW ADDITION ****
_____________________________________________________________________
Top of natural channel elevation =   2300.000(Ft.)
End of natural channel elevation =   2269.900(Ft.)
Length of natural channel  =   946.300(Ft.)
Estimated mean flow rate at midpoint of channel =     99.045(CFS)

Natural valley channel type used
L.A. County flood control district formula for channel velocity:
 Velocity(ft/s) = (7 + 8(q(English Units)^.352)(slope^0.5)
Velocity using mean channel flow =   8.44(Ft/s)

Correction to map slope used on extremely rugged channels with
drops and waterfalls (Plate D-6.2)
       Normal channel slope =  0.0318
Corrected/adjusted channel slope =  0.0318
Travel time =    1.87 min.     TC =   13.12  min.


 Adding area flow to channel
UNDEVELOPED (poor cover) subarea
Runoff Coefficient = 0.853
Decimal fraction soil group A = 0.340
Decimal fraction soil group B = 0.610
Decimal fraction soil group C = 0.000
Decimal fraction soil group D = 0.050
RI index for soil(AMC 3)  =  87.89
Pervious area fraction =  1.000; Impervious fraction =  0.000
Rainfall intensity =      3.336(In/Hr) for a   100.0 year storm
Subarea runoff =     81.016(CFS) for     28.466(Ac.)
Total runoff =    135.367(CFS)   Total area =      45.774(Ac.)
```

```
++++++++++++++++++++++++++++++++++++++++++++++++++++++++++++++++++++++
Process from Point/Station     1303.000 to Point/Station     1304.000
**** NATURAL CHANNEL TIME + SUBAREA FLOW ADDITION ****
______________________________________________________________________
Top of natural channel elevation =   2269.900(Ft.)
End of natural channel elevation =   2258.000(Ft.)
Length of natural channel  =   281.400(Ft.)
Estimated mean flow rate at midpoint of channel =    164.841(CFS)

Natural valley channel type used
L.A. County flood control district formula for channel velocity:
 Velocity(ft/s) = (7 + 8(q(English Units)^.352)(slope^0.5)
Velocity using mean channel flow =  11.36(Ft/s)

Correction to map slope used on extremely rugged channels with
drops and waterfalls (Plate D-6.2)
       Normal channel slope =  0.0423
Corrected/adjusted channel slope =  0.0423
Travel time =    0.41 min.     TC =   13.53  min.


 Adding area flow to channel
UNDEVELOPED (poor cover) subarea
Runoff Coefficient = 0.853
Decimal fraction soil group A = 0.350
Decimal fraction soil group B = 0.560
Decimal fraction soil group C = 0.080
Decimal fraction soil group D = 0.010
RI index for soil(AMC 3)  =  87.94
Pervious area fraction =  1.000; Impervious fraction =  0.000
Rainfall intensity =      3.285(In/Hr) for a   100.0 year storm
Subarea runoff =     55.828(CFS) for     19.933(Ac.)
Total runoff =    191.195(CFS)   Total area =      65.707(Ac.)


++++++++++++++++++++++++++++++++++++++++++++++++++++++++++++++++++++++
Process from Point/Station     1304.000 to Point/Station     1305.000
**** PIPEFLOW TRAVEL TIME (Program estimated size) ****
______________________________________________________________________
Upstream point/station elevation =  2258.000(Ft.)
Downstream point/station elevation =  2249.600(Ft.)
Pipe length  =   168.30(Ft.)   Manning's N = 0.013
No. of pipes = 1  Required pipe flow  =   191.195(CFS)
Nearest computed pipe diameter  =     39.00(In.)
Calculated individual pipe flow  =   191.195(CFS)
Normal flow depth in pipe =   33.38(In.)
Flow top width inside pipe =   27.40(In.)
Critical depth could not be calculated.
Pipe flow velocity =     25.27(Ft/s)
Travel time through pipe =    0.11 min.
Time of concentration (TC) =    13.64 min.
End of computations, total study area =           65.71 (Ac.)
The following figures may
be used for a unit hydrograph study of the same area.

Area averaged pervious area fraction(Ap) = 1.000
Area averaged RI index number =  74.8
```

```
              Riverside County Rational Hydrology Program

CIVILCADD/CIVILDESIGN Engineering Software,(c) 1989 - 2005 Version 7.1
       Rational Hydrology Study        Date: 10/04/20  File:PX1400.out
------------------------------------------------------------------------
BEAUMONT POINTE
PRELIMINARY HYDROLOGY STUDY
AREA 1400 EXISTING
100-YEAR
------------------------------------------------------------------------
 *********   Hydrology Study Control Information **********

 English (in-lb) Units used in input data file

------------------------------------------------------------------------


Program License Serial Number 6094

------------------------------------------------------------------------
Rational Method Hydrology Program based on
Riverside County Flood Control & Water Conservation District
1978 hydrology manual

Storm event (year) =  100.00 Antecedent Moisture Condition = 3

2 year, 1 hour precipitation =  0.551(In.)
100 year, 1 hour precipitation =  1.560(In.)

Storm event year = 100.0
Calculated rainfall intensity data:
1 hour intensity =  1.560(In/Hr)
Slope of intensity duration curve = 0.5000




++++++++++++++++++++++++++++++++++++++++++++++++++++++++++++++++++++++
Process from Point/Station     1400.000 to Point/Station     1401.000
**** INITIAL AREA EVALUATION ****
______________________________________________________________________
Initial area flow distance =   706.800(Ft.)
Top (of initial area) elevation =  2280.100(Ft.)
Bottom (of initial area) elevation =  2279.500(Ft.)
Difference in elevation =     0.600(Ft.)
Slope =    0.00085  s(percent)=       0.08
TC = k(0.530)*[(length^3)/(elevation change)]^0.2
Initial area time of concentration =   30.076 min.
Rainfall intensity =      2.203(In/Hr) for a   100.0 year storm
UNDEVELOPED (poor cover) subarea
Runoff Coefficient = 0.834
Decimal fraction soil group A = 0.210
Decimal fraction soil group B = 0.790
Decimal fraction soil group C = 0.000
Decimal fraction soil group D = 0.000
RI index for soil(AMC 3)  =  88.41
Pervious area fraction =  1.000; Impervious fraction =  0.000
Initial subarea runoff =      8.670(CFS)
Total initial stream area =        4.719(Ac.)
Pervious area fraction = 1.000


++++++++++++++++++++++++++++++++++++++++++++++++++++++++++++++++++++++
Process from Point/Station     1401.000 to Point/Station     1402.000
```

```
**** PIPEFLOW TRAVEL TIME (Program estimated size) ****
_______________________________________________________________________
Upstream point/station elevation =  2279.500(Ft.)
Downstream point/station elevation =  2274.400(Ft.)
Pipe length  =   141.40(Ft.)   Manning's N = 0.013
No. of pipes = 1  Required pipe flow  =     8.670(CFS)
Nearest computed pipe diameter  =     15.00(In.)
Calculated individual pipe flow  =     8.670(CFS)
Normal flow depth in pipe =    9.30(In.)
Flow top width inside pipe =   14.56(In.)
Critical Depth =   13.72(In.)
Pipe flow velocity =     10.84(Ft/s)
Travel time through pipe =    0.22 min.
Time of concentration (TC) =    30.29 min.
End of computations, total study area =            4.72 (Ac.)
The following figures may
be used for a unit hydrograph study of the same area.

Area averaged pervious area fraction(Ap) = 1.000
Area averaged RI index number =  75.7
```

```
              Riverside County Rational Hydrology Program

CIVILCADD/CIVILDESIGN Engineering Software,(c) 1989 - 2005 Version 7.1
       Rational Hydrology Study        Date: 10/04/20  File:PX1500.out
------------------------------------------------------------------------
BEAUMONT POINTE
PRELIMINARY HYDROLOGY STUDY
AREA 1500 EXISTING
100-YEAR
------------------------------------------------------------------------
 *********   Hydrology Study Control Information **********

 English (in-lb) Units used in input data file

------------------------------------------------------------------------


Program License Serial Number 6094

------------------------------------------------------------------------
Rational Method Hydrology Program based on
Riverside County Flood Control & Water Conservation District
1978 hydrology manual

Storm event (year) =  100.00 Antecedent Moisture Condition = 3

2 year, 1 hour precipitation =  0.551(In.)
100 year, 1 hour precipitation =  1.560(In.)

Storm event year = 100.0
Calculated rainfall intensity data:
1 hour intensity =  1.560(In/Hr)
Slope of intensity duration curve = 0.5000




++++++++++++++++++++++++++++++++++++++++++++++++++++++++++++++++++++++
Process from Point/Station     1500.000 to Point/Station     1501.000
**** INITIAL AREA EVALUATION ****
______________________________________________________________________
Initial area flow distance =   395.200(Ft.)
Top (of initial area) elevation =  2500.000(Ft.)
Bottom (of initial area) elevation =  2390.000(Ft.)
Difference in elevation =   110.000(Ft.)
Slope =    0.27834  s(percent)=      27.83
TC = k(0.530)*[(length^3)/(elevation change)]^0.2
Initial area time of concentration =    7.483 min.
Rainfall intensity =      4.417(In/Hr) for a   100.0 year storm
UNDEVELOPED (poor cover) subarea
Runoff Coefficient = 0.870
Decimal fraction soil group A = 0.000
Decimal fraction soil group B = 1.000
Decimal fraction soil group C = 0.000
Decimal fraction soil group D = 0.000
RI index for soil(AMC 3)  =  89.80
Pervious area fraction =  1.000; Impervious fraction =  0.000
Initial subarea runoff =      5.962(CFS)
Total initial stream area =        1.551(Ac.)
Pervious area fraction = 1.000


++++++++++++++++++++++++++++++++++++++++++++++++++++++++++++++++++++++
Process from Point/Station     1501.000 to Point/Station     1502.000
```

```
**** NATURAL CHANNEL TIME + SUBAREA FLOW ADDITION ****
____________________________________________________________________
Top of natural channel elevation =   2390.000(Ft.)
End of natural channel elevation =   2308.500(Ft.)
Length of natural channel  =   965.100(Ft.)
Estimated mean flow rate at midpoint of channel =     29.682(CFS)

Natural valley channel type used
L.A. County flood control district formula for channel velocity:
 Velocity(ft/s) = (7 + 8(q(English Units)^.352)(slope^0.5)
Velocity using mean channel flow =   9.70(Ft/s)

Correction to map slope used on extremely rugged channels with
drops and waterfalls (Plate D-6.2)
       Normal channel slope =  0.0844
Corrected/adjusted channel slope =  0.0844
Travel time =    1.66 min.     TC =    9.14  min.


 Adding area flow to channel
UNDEVELOPED (poor cover) subarea
Runoff Coefficient = 0.861
Decimal fraction soil group A = 0.280
Decimal fraction soil group B = 0.720
Decimal fraction soil group C = 0.000
Decimal fraction soil group D = 0.000
RI index for soil(AMC 3)  =  87.95
Pervious area fraction =  1.000; Impervious fraction =  0.000
Rainfall intensity =      3.997(In/Hr) for a   100.0 year storm
Subarea runoff =     42.455(CFS) for     12.342(Ac.)
Total runoff =     48.416(CFS)   Total area =      13.893(Ac.)


++++++++++++++++++++++++++++++++++++++++++++++++++++++++++++++++++++++
Process from Point/Station     1502.000 to Point/Station     1503.000
**** NATURAL CHANNEL TIME + SUBAREA FLOW ADDITION ****
____________________________________________________________________
Top of natural channel elevation =   2308.500(Ft.)
End of natural channel elevation =   2287.800(Ft.)
Length of natural channel  =   296.000(Ft.)
Estimated mean flow rate at midpoint of channel =     69.181(CFS)

Natural valley channel type used
L.A. County flood control district formula for channel velocity:
 Velocity(ft/s) = (7 + 8(q(English Units)^.352)(slope^0.5)
Velocity using mean channel flow =  11.25(Ft/s)

Correction to map slope used on extremely rugged channels with
drops and waterfalls (Plate D-6.2)
       Normal channel slope =  0.0699
Corrected/adjusted channel slope =  0.0699
Travel time =    0.44 min.     TC =    9.58  min.


 Adding area flow to channel
UNDEVELOPED (poor cover) subarea
Runoff Coefficient = 0.860
Decimal fraction soil group A = 0.290
Decimal fraction soil group B = 0.710
Decimal fraction soil group C = 0.000
Decimal fraction soil group D = 0.000
RI index for soil(AMC 3)  =  87.89
Pervious area fraction =  1.000; Impervious fraction =  0.000
Rainfall intensity =      3.904(In/Hr) for a   100.0 year storm
Subarea runoff =     39.991(CFS) for     11.917(Ac.)
Total runoff =     88.407(CFS)   Total area =      25.810(Ac.)
```

```
++++++++++++++++++++++++++++++++++++++++++++++++++++++++++++++++++++++
Process from Point/Station     1503.000 to Point/Station     1504.000
**** PIPEFLOW TRAVEL TIME (Program estimated size) ****
______________________________________________________________________
Upstream point/station elevation =  2287.800(Ft.)
Downstream point/station elevation =  2283.200(Ft.)
Pipe length  =   124.30(Ft.)   Manning's N = 0.013
No. of pipes = 1  Required pipe flow  =    88.407(CFS)
Nearest computed pipe diameter  =     33.00(In.)
Calculated individual pipe flow  =    88.407(CFS)
Normal flow depth in pipe =   23.77(In.)
Flow top width inside pipe =   29.63(In.)
Critical depth could not be calculated.
Pipe flow velocity =     19.29(Ft/s)
Travel time through pipe =    0.11 min.
Time of concentration (TC) =     9.69 min.
End of computations, total study area =           25.81 (Ac.)
The following figures may
be used for a unit hydrograph study of the same area.

Area averaged pervious area fraction(Ap) = 1.000
Area averaged RI index number =  75.1
```

```
              Riverside County Rational Hydrology Program

CIVILCADD/CIVILDESIGN Engineering Software,(c) 1989 - 2005 Version 7.1
       Rational Hydrology Study        Date: 10/04/20  File:PX1600.out
------------------------------------------------------------------------
BEAUMONT POINTE
PRELIMINARY HYDROLOGY STUDY
AREA 1600 EXISTING
100-YEAR
------------------------------------------------------------------------
 *********   Hydrology Study Control Information **********

 English (in-lb) Units used in input data file

------------------------------------------------------------------------


Program License Serial Number 6094

------------------------------------------------------------------------
Rational Method Hydrology Program based on
Riverside County Flood Control & Water Conservation District
1978 hydrology manual

Storm event (year) =  100.00 Antecedent Moisture Condition = 3

2 year, 1 hour precipitation =  0.551(In.)
100 year, 1 hour precipitation =  1.560(In.)

Storm event year = 100.0
Calculated rainfall intensity data:
1 hour intensity =  1.560(In/Hr)
Slope of intensity duration curve = 0.5000




++++++++++++++++++++++++++++++++++++++++++++++++++++++++++++++++++++++
Process from Point/Station     1600.000 to Point/Station     1601.000
**** INITIAL AREA EVALUATION ****
______________________________________________________________________
Initial area flow distance =   946.800(Ft.)
Top (of initial area) elevation =  2510.000(Ft.)
Bottom (of initial area) elevation =  2401.500(Ft.)
Difference in elevation =   108.500(Ft.)
Slope =    0.11460  s(percent)=      11.46
TC = k(0.530)*[(length^3)/(elevation change)]^0.2
Initial area time of concentration =   12.675 min.
Rainfall intensity =      3.394(In/Hr) for a   100.0 year storm
UNDEVELOPED (poor cover) subarea
Runoff Coefficient = 0.863
Decimal fraction soil group A = 0.130
Decimal fraction soil group B = 0.700
Decimal fraction soil group C = 0.000
Decimal fraction soil group D = 0.170
RI index for soil(AMC 3)  =  90.06
Pervious area fraction =  1.000; Impervious fraction =  0.000
Initial subarea runoff =     23.891(CFS)
Total initial stream area =        8.160(Ac.)
Pervious area fraction = 1.000


++++++++++++++++++++++++++++++++++++++++++++++++++++++++++++++++++++++
Process from Point/Station     1601.000 to Point/Station     1602.000
```

```
**** NATURAL CHANNEL TIME + SUBAREA FLOW ADDITION ****
____________________________________________________________________
Top of natural channel elevation =   2401.500(Ft.)
End of natural channel elevation =   2360.000(Ft.)
Length of natural channel  =  1034.600(Ft.)
Estimated mean flow rate at midpoint of channel =     55.648(CFS)

Natural valley channel type used
L.A. County flood control district formula for channel velocity:
 Velocity(ft/s) = (7 + 8(q(English Units)^.352)(slope^0.5)
Velocity using mean channel flow =   8.00(Ft/s)

Correction to map slope used on extremely rugged channels with
drops and waterfalls (Plate D-6.2)
       Normal channel slope =  0.0401
Corrected/adjusted channel slope =  0.0401
Travel time =    2.16 min.     TC =   14.83  min.


 Adding area flow to channel
UNDEVELOPED (poor cover) subarea
Runoff Coefficient = 0.848
Decimal fraction soil group A = 0.350
Decimal fraction soil group B = 0.650
Decimal fraction soil group C = 0.000
Decimal fraction soil group D = 0.000
RI index for soil(AMC 3)  =  87.49
Pervious area fraction =  1.000; Impervious fraction =  0.000
Rainfall intensity =      3.138(In/Hr) for a   100.0 year storm
Subarea runoff =     57.750(CFS) for     21.693(Ac.)
Total runoff =     81.641(CFS)   Total area =      29.853(Ac.)


++++++++++++++++++++++++++++++++++++++++++++++++++++++++++++++++++++++
Process from Point/Station     1602.000 to Point/Station     1603.000
**** NATURAL CHANNEL TIME + SUBAREA FLOW ADDITION ****
____________________________________________________________________
Top of natural channel elevation =   2360.000(Ft.)
End of natural channel elevation =   2301.500(Ft.)
Length of natural channel  =  1300.900(Ft.)
Estimated mean flow rate at midpoint of channel =    128.168(CFS)

Natural valley channel type used
L.A. County flood control district formula for channel velocity:
 Velocity(ft/s) = (7 + 8(q(English Units)^.352)(slope^0.5)
Velocity using mean channel flow =  10.85(Ft/s)

Correction to map slope used on extremely rugged channels with
drops and waterfalls (Plate D-6.2)
       Normal channel slope =  0.0450
Corrected/adjusted channel slope =  0.0450
Travel time =    2.00 min.     TC =   16.83  min.


 Adding area flow to channel
UNDEVELOPED (poor cover) subarea
Runoff Coefficient = 0.842
Decimal fraction soil group A = 0.450
Decimal fraction soil group B = 0.550
Decimal fraction soil group C = 0.000
Decimal fraction soil group D = 0.000
RI index for soil(AMC 3)  =  86.83
Pervious area fraction =  1.000; Impervious fraction =  0.000
Rainfall intensity =      2.945(In/Hr) for a   100.0 year storm
Subarea runoff =     84.406(CFS) for     34.026(Ac.)
Total runoff =    166.047(CFS)   Total area =      63.879(Ac.)
```

```
++++++++++++++++++++++++++++++++++++++++++++++++++++++++++++++++++++++
Process from Point/Station     1603.000 to Point/Station     1603.000
**** CONFLUENCE OF MAIN STREAMS ****
______________________________________________________________________
The following data inside Main Stream is listed:
In Main Stream number: 1
Stream flow area =     63.879(Ac.)
Runoff from this stream =    166.047(CFS)
Time of concentration =   16.83 min.
Rainfall intensity =     2.945(In/Hr)
Program is now starting with Main Stream No. 2


++++++++++++++++++++++++++++++++++++++++++++++++++++++++++++++++++++++
Process from Point/Station     1604.000 to Point/Station     1605.000
**** INITIAL AREA EVALUATION ****
______________________________________________________________________
Initial area flow distance =   611.700(Ft.)
Top (of initial area) elevation =  2500.000(Ft.)
Bottom (of initial area) elevation =  2390.000(Ft.)
Difference in elevation =   110.000(Ft.)
Slope =    0.17983  s(percent)=      17.98
TC = k(0.530)*[(length^3)/(elevation change)]^0.2
Initial area time of concentration =    9.726 min.
Rainfall intensity =      3.875(In/Hr) for a   100.0 year storm
UNDEVELOPED (poor cover) subarea
Runoff Coefficient = 0.881
Decimal fraction soil group A = 0.000
Decimal fraction soil group B = 0.360
Decimal fraction soil group C = 0.000
Decimal fraction soil group D = 0.640
RI index for soil(AMC 3)  =  94.02
Pervious area fraction =  1.000; Impervious fraction =  0.000
Initial subarea runoff =     11.572(CFS)
Total initial stream area =        3.391(Ac.)
Pervious area fraction = 1.000


++++++++++++++++++++++++++++++++++++++++++++++++++++++++++++++++++++++
Process from Point/Station     1605.000 to Point/Station     1603.000
**** NATURAL CHANNEL TIME + SUBAREA FLOW ADDITION ****
______________________________________________________________________
Top of natural channel elevation =   2390.000(Ft.)
End of natural channel elevation =   2301.500(Ft.)
Length of natural channel  =  1627.400(Ft.)
Estimated mean flow rate at midpoint of channel =     51.152(CFS)

Natural valley channel type used
L.A. County flood control district formula for channel velocity:
 Velocity(ft/s) = (7 + 8(q(English Units)^.352)(slope^0.5)
Velocity using mean channel flow =   9.09(Ft/s)

Correction to map slope used on extremely rugged channels with
drops and waterfalls (Plate D-6.2)
       Normal channel slope =  0.0544
Corrected/adjusted channel slope =  0.0544
Travel time =    2.99 min.     TC =   12.71  min.


 Adding area flow to channel
UNDEVELOPED (poor cover) subarea
Runoff Coefficient = 0.857
Decimal fraction soil group A = 0.400
Decimal fraction soil group B = 0.360
```

```
Decimal fraction soil group C = 0.000
Decimal fraction soil group D = 0.240
RI index for soil(AMC 3)  =  88.74
Pervious area fraction =  1.000; Impervious fraction =  0.000
Rainfall intensity =      3.389(In/Hr) for a   100.0 year storm
Subarea runoff =     67.396(CFS) for     23.197(Ac.)
Total runoff =     78.968(CFS)   Total area =      26.588(Ac.)


++++++++++++++++++++++++++++++++++++++++++++++++++++++++++++++++++++++
Process from Point/Station     1603.000 to Point/Station     1603.000
**** CONFLUENCE OF MAIN STREAMS ****
______________________________________________________________________
The following data inside Main Stream is listed:
In Main Stream number: 2
Stream flow area =     26.588(Ac.)
Runoff from this stream =     78.968(CFS)
Time of concentration =   12.71 min.
Rainfall intensity =     3.389(In/Hr)
Summary of stream data:

Stream   Flow rate      TC            Rainfall Intensity
 No.       (CFS)       (min)                 (In/Hr)


1      166.047     16.83            2.945
2       78.968     12.71            3.389
Largest stream flow has longer time of concentration
Qp =    166.047 + sum of
         Qb         Ia/Ib
         78.968 *    0.869 =     68.628
Qp =    234.675

Total of 2 main streams to confluence:
Flow rates before confluence point:
     166.047      78.968
Area of streams before confluence:
       63.879       26.588


Results of confluence:
Total flow rate =    234.675(CFS)
Time of concentration =    16.830 min.
Effective stream area after confluence  =     90.467(Ac.)


++++++++++++++++++++++++++++++++++++++++++++++++++++++++++++++++++++++
Process from Point/Station     1603.000 to Point/Station     1606.000
**** PIPEFLOW TRAVEL TIME (Program estimated size) ****
______________________________________________________________________
Upstream point/station elevation =  2301.500(Ft.)
Downstream point/station elevation =  2295.200(Ft.)
Pipe length  =   199.80(Ft.)   Manning's N = 0.013
No. of pipes = 2  Required pipe flow  =   234.675(CFS)
Nearest computed pipe diameter  =     36.00(In.)
Calculated individual pipe flow  =   117.337(CFS)
Normal flow depth in pipe =   29.20(In.)
Flow top width inside pipe =   28.18(In.)
Critical depth could not be calculated.
Pipe flow velocity =     19.10(Ft/s)
Travel time through pipe =    0.17 min.
Time of concentration (TC) =    17.00 min.
End of computations, total study area =           90.47 (Ac.)
The following figures may
be used for a unit hydrograph study of the same area.
```

```
Area averaged pervious area fraction(Ap) = 1.000
Area averaged RI index number =  75.1
```

Developed Hydrology Model and Results C

```
                    Riverside County Rational Hydrology Program

        CIVILCADD/CIVILDESIGN Engineering Software,(c) 1989 - 2005 Version 7.1
                Rational Hydrology Study        Date: 02/23/23
File:Area01.out

----------------------------------------------------------------------
        BEAUMONT POINTE
        PRELIMINARY HYDROLOGY STUDY
        AREA 1 DEVELOPED
        100-YEAR

----------------------------------------------------------------------
         *********   Hydrology Study Control Information **********

         English (in-lb) Units used in input data file


----------------------------------------------------------------------


        Program License Serial Number 6094


----------------------------------------------------------------------
        Rational Method Hydrology Program based on
        Riverside County Flood Control & Water Conservation District
        1978 hydrology manual

        Storm event (year) =  100.00 Antecedent Moisture Condition = 2

        2 year, 1 hour precipitation =  0.551(In.)
        100 year, 1 hour precipitation =  1.560(In.)

        Storm event year = 100.0
        Calculated rainfall intensity data:
        1 hour intensity =  1.560(In/Hr)
        Slope of intensity duration curve = 0.5000




        ++++++++++++++++++++++++++++++++++++++++++++++++++++++++++++++++++++++
        Process from Point/Station        1.010 to Point/Station        1.020
        **** INITIAL AREA EVALUATION ****
        ______________________________________________________________________
        Initial area flow distance =   645.400(Ft.)
        Top (of initial area) elevation =   383.000(Ft.)
        Bottom (of initial area) elevation =   375.700(Ft.)
        Difference in elevation =     7.300(Ft.)
        Slope =    0.01131  s(percent)=       1.13
        TC = k(0.300)*[(length^3)/(elevation change)]^0.2
```

```
Initial area time of concentration =    9.780 min.
Rainfall intensity =      3.864(In/Hr) for a   100.0 year storm
COMMERCIAL subarea type
Runoff Coefficient = 0.877
Decimal fraction soil group A = 0.260
Decimal fraction soil group B = 0.740
Decimal fraction soil group C = 0.000
Decimal fraction soil group D = 0.000
RI index for soil(AMC 2)  =  49.76
Pervious area fraction =  0.100; Impervious fraction =  0.900
Initial subarea runoff =      5.759(CFS)
Total initial stream area =        1.700(Ac.)
Pervious area fraction = 0.100


++++++++++++++++++++++++++++++++++++++++++++++++++++++++++++++++++++++
Process from Point/Station        1.020 to Point/Station        1.030
**** PIPEFLOW TRAVEL TIME (Program estimated size) ****
______________________________________________________________________
Upstream point/station elevation =   371.700(Ft.)
Downstream point/station elevation =   370.100(Ft.)
Pipe length  =   398.20(Ft.)   Manning's N = 0.013
No. of pipes = 1  Required pipe flow  =     5.759(CFS)
Nearest computed pipe diameter  =     18.00(In.)
Calculated individual pipe flow  =     5.759(CFS)
Normal flow depth in pipe =   12.91(In.)
Flow top width inside pipe =   16.21(In.)
Critical Depth =   11.12(In.)
Pipe flow velocity =      4.24(Ft/s)
Travel time through pipe =    1.57 min.
Time of concentration (TC) =    11.35 min.


++++++++++++++++++++++++++++++++++++++++++++++++++++++++++++++++++++++
Process from Point/Station        1.020 to Point/Station        1.030
**** SUBAREA FLOW ADDITION ****
______________________________________________________________________
COMMERCIAL subarea type
Runoff Coefficient = 0.877
Decimal fraction soil group A = 0.150
Decimal fraction soil group B = 0.850
Decimal fraction soil group C = 0.000
Decimal fraction soil group D = 0.000
RI index for soil(AMC 2)  =  52.40
Pervious area fraction =  0.100; Impervious fraction =  0.900
Time of concentration =    11.35 min.
Rainfall intensity =      3.587(In/Hr) for a   100.0 year storm
Subarea runoff =     24.860(CFS) for      7.899(Ac.)
Total runoff =     30.619(CFS)  Total area =       9.599(Ac.)


++++++++++++++++++++++++++++++++++++++++++++++++++++++++++++++++++++++
Process from Point/Station        1.030 to Point/Station        1.040
**** PIPEFLOW TRAVEL TIME (Program estimated size) ****
```

```
Upstream point/station elevation =   370.100(Ft.)
Downstream point/station elevation =   369.800(Ft.)
Pipe length  =    68.30(Ft.)   Manning's N = 0.013
No. of pipes = 1  Required pipe flow  =    30.619(CFS)
Nearest computed pipe diameter  =     33.00(In.)
Calculated individual pipe flow  =    30.619(CFS)
Normal flow depth in pipe =   23.88(In.)
Flow top width inside pipe =   29.51(In.)
Critical Depth =   22.09(In.)
Pipe flow velocity =      6.65(Ft/s)
Travel time through pipe =    0.17 min.
Time of concentration (TC) =    11.52 min.


++++++++++++++++++++++++++++++++++++++++++++++++++++++++++++++++++++++
Process from Point/Station        1.030 to Point/Station        1.040
**** SUBAREA FLOW ADDITION ****
______________________________________________________________________
COMMERCIAL subarea type
Runoff Coefficient = 0.874
Decimal fraction soil group A = 0.340
Decimal fraction soil group B = 0.660
Decimal fraction soil group C = 0.000
Decimal fraction soil group D = 0.000
RI index for soil(AMC 2)  =  47.84
Pervious area fraction =  0.100; Impervious fraction =  0.900
Time of concentration =    11.52 min.
Rainfall intensity =      3.561(In/Hr) for a   100.0 year storm
Subarea runoff =      3.877(CFS) for      1.246(Ac.)
Total runoff =     34.496(CFS)  Total area =      10.845(Ac.)


++++++++++++++++++++++++++++++++++++++++++++++++++++++++++++++++++++++
Process from Point/Station        1.040 to Point/Station        1.050
**** PIPEFLOW TRAVEL TIME (Program estimated size) ****
______________________________________________________________________
Upstream point/station elevation =   369.800(Ft.)
Downstream point/station elevation =   366.700(Ft.)
Pipe length  =   790.40(Ft.)   Manning's N = 0.013
No. of pipes = 1  Required pipe flow  =    34.496(CFS)
Nearest computed pipe diameter  =     33.00(In.)
Calculated individual pipe flow  =    34.496(CFS)
Normal flow depth in pipe =   28.50(In.)
Flow top width inside pipe =   22.65(In.)
Critical Depth =   23.46(In.)
Pipe flow velocity =      6.33(Ft/s)
Travel time through pipe =    2.08 min.
Time of concentration (TC) =    13.60 min.


++++++++++++++++++++++++++++++++++++++++++++++++++++++++++++++++++++++
Process from Point/Station        1.040 to Point/Station        1.050
**** SUBAREA FLOW ADDITION ****
```

```
COMMERCIAL subarea type
Runoff Coefficient = 0.878
Decimal fraction soil group A = 0.020
Decimal fraction soil group B = 0.980
Decimal fraction soil group C = 0.000
Decimal fraction soil group D = 0.000
RI index for soil(AMC 2)  =  55.52
Pervious area fraction =  0.100; Impervious fraction =  0.900
Time of concentration =    13.60 min.
Rainfall intensity =      3.277(In/Hr) for a   100.0 year storm
Subarea runoff =     17.407(CFS) for      6.051(Ac.)
Total runoff =     51.903(CFS)  Total area =      16.896(Ac.)


++++++++++++++++++++++++++++++++++++++++++++++++++++++++++++++++++++++
Process from Point/Station        1.050 to Point/Station        1.060
**** PIPEFLOW TRAVEL TIME (Program estimated size) ****
______________________________________________________________________
Upstream point/station elevation =   366.700(Ft.)
Downstream point/station elevation =   365.900(Ft.)
Pipe length  =   193.20(Ft.)   Manning's N = 0.013
No. of pipes = 1  Required pipe flow  =    51.903(CFS)
Nearest computed pipe diameter  =     39.00(In.)
Calculated individual pipe flow  =    51.903(CFS)
Normal flow depth in pipe =   31.17(In.)
Flow top width inside pipe =   31.24(In.)
Critical Depth =   27.60(In.)
Pipe flow velocity =      7.30(Ft/s)
Travel time through pipe =    0.44 min.
Time of concentration (TC) =    14.04 min.


++++++++++++++++++++++++++++++++++++++++++++++++++++++++++++++++++++++
Process from Point/Station        1.050 to Point/Station        1.060
**** SUBAREA FLOW ADDITION ****
______________________________________________________________________
COMMERCIAL subarea type
Runoff Coefficient = 0.872
Decimal fraction soil group A = 0.360
Decimal fraction soil group B = 0.640
Decimal fraction soil group C = 0.000
Decimal fraction soil group D = 0.000
RI index for soil(AMC 2)  =  47.36
Pervious area fraction =  0.100; Impervious fraction =  0.900
Time of concentration =    14.04 min.
Rainfall intensity =      3.225(In/Hr) for a   100.0 year storm
Subarea runoff =      3.652(CFS) for      1.299(Ac.)
Total runoff =     55.555(CFS)  Total area =      18.195(Ac.)


++++++++++++++++++++++++++++++++++++++++++++++++++++++++++++++++++++++
Process from Point/Station        1.060 to Point/Station        1.070
**** PIPEFLOW TRAVEL TIME (Program estimated size) ****
```

```
Upstream point/station elevation =   365.900(Ft.)
Downstream point/station elevation =   365.800(Ft.)
Pipe length  =    21.70(Ft.)   Manning's N = 0.013
No. of pipes = 1  Required pipe flow  =    55.555(CFS)
Nearest computed pipe diameter  =     39.00(In.)
Calculated individual pipe flow  =    55.555(CFS)
Normal flow depth in pipe =   31.69(In.)
Flow top width inside pipe =   30.44(In.)
Critical Depth =   28.55(In.)
Pipe flow velocity =      7.70(Ft/s)
Travel time through pipe =    0.05 min.
Time of concentration (TC) =    14.09 min.


++++++++++++++++++++++++++++++++++++++++++++++++++++++++++++++++++++++
Process from Point/Station        1.060 to Point/Station        1.070
**** SUBAREA FLOW ADDITION ****
______________________________________________________________________
COMMERCIAL subarea type
Runoff Coefficient = 0.878
Decimal fraction soil group A = 0.000
Decimal fraction soil group B = 1.000
Decimal fraction soil group C = 0.000
Decimal fraction soil group D = 0.000
RI index for soil(AMC 2)  =  56.00
Pervious area fraction =  0.100; Impervious fraction =  0.900
Time of concentration =    14.09 min.
Rainfall intensity =      3.220(In/Hr) for a   100.0 year storm
Subarea runoff =      5.766(CFS) for      2.040(Ac.)
Total runoff =     61.321(CFS)  Total area =      20.235(Ac.)


++++++++++++++++++++++++++++++++++++++++++++++++++++++++++++++++++++++
Process from Point/Station        1.070 to Point/Station        1.080
**** PIPEFLOW TRAVEL TIME (Program estimated size) ****
______________________________________________________________________
Upstream point/station elevation =   365.800(Ft.)
Downstream point/station elevation =   365.500(Ft.)
Pipe length  =    71.80(Ft.)   Manning's N = 0.013
No. of pipes = 1  Required pipe flow  =    61.321(CFS)
Nearest computed pipe diameter  =     42.00(In.)
Calculated individual pipe flow  =    61.321(CFS)
Normal flow depth in pipe =   32.44(In.)
Flow top width inside pipe =   35.22(In.)
Critical Depth =   29.43(In.)
Pipe flow velocity =      7.69(Ft/s)
Travel time through pipe =    0.16 min.
Time of concentration (TC) =    14.24 min.


++++++++++++++++++++++++++++++++++++++++++++++++++++++++++++++++++++++
Process from Point/Station        1.070 to Point/Station        1.080
**** SUBAREA FLOW ADDITION ****
```

```
COMMERCIAL subarea type
Runoff Coefficient = 0.878
Decimal fraction soil group A = 0.000
Decimal fraction soil group B = 1.000
Decimal fraction soil group C = 0.000
Decimal fraction soil group D = 0.000
RI index for soil(AMC 2)  =  56.00
Pervious area fraction =  0.100; Impervious fraction =  0.900
Time of concentration =    14.24 min.
Rainfall intensity =      3.202(In/Hr) for a   100.0 year storm
Subarea runoff =      2.159(CFS) for      0.768(Ac.)
Total runoff =     63.480(CFS)  Total area =      21.003(Ac.)


++++++++++++++++++++++++++++++++++++++++++++++++++++++++++++++++++++++
Process from Point/Station        1.080 to Point/Station        1.090
**** PIPEFLOW TRAVEL TIME (Program estimated size) ****
______________________________________________________________________
Upstream point/station elevation =   365.500(Ft.)
Downstream point/station elevation =   365.000(Ft.)
Pipe length  =   127.30(Ft.)   Manning's N = 0.013
No. of pipes = 1  Required pipe flow  =    63.480(CFS)
Nearest computed pipe diameter  =     42.00(In.)
Calculated individual pipe flow  =    63.480(CFS)
Normal flow depth in pipe =   34.69(In.)
Flow top width inside pipe =   31.85(In.)
Critical Depth =   29.96(In.)
Pipe flow velocity =      7.47(Ft/s)
Travel time through pipe =    0.28 min.
Time of concentration (TC) =    14.53 min.


++++++++++++++++++++++++++++++++++++++++++++++++++++++++++++++++++++++
Process from Point/Station        1.080 to Point/Station        1.090
**** CONFLUENCE OF MAIN STREAMS ****
______________________________________________________________________
The following data inside Main Stream is listed:
In Main Stream number: 1
Stream flow area =     21.003(Ac.)
Runoff from this stream =     63.480(CFS)
Time of concentration =   14.53 min.
Rainfall intensity =     3.171(In/Hr)
Program is now starting with Main Stream No. 2


++++++++++++++++++++++++++++++++++++++++++++++++++++++++++++++++++++++
Process from Point/Station        1.100 to Point/Station        1.110
**** INITIAL AREA EVALUATION ****
______________________________________________________________________
Initial area flow distance =   656.700(Ft.)
Top (of initial area) elevation =   383.000(Ft.)
Bottom (of initial area) elevation =   376.000(Ft.)
Difference in elevation =     7.000(Ft.)
```

```
Slope =    0.01066  s(percent)=       1.07
TC = k(0.300)*[(length^3)/(elevation change)]^0.2
Initial area time of concentration =    9.966 min.
Rainfall intensity =      3.828(In/Hr) for a   100.0 year storm
COMMERCIAL subarea type
Runoff Coefficient = 0.879
Decimal fraction soil group A = 0.090
Decimal fraction soil group B = 0.910
Decimal fraction soil group C = 0.000
Decimal fraction soil group D = 0.000
RI index for soil(AMC 2)  =  53.84
Pervious area fraction =  0.100; Impervious fraction =  0.900
Initial subarea runoff =     10.239(CFS)
Total initial stream area =        3.042(Ac.)
Pervious area fraction = 0.100


++++++++++++++++++++++++++++++++++++++++++++++++++++++++++++++++++++++
Process from Point/Station        1.110 to Point/Station        1.120
**** PIPEFLOW TRAVEL TIME (Program estimated size) ****
______________________________________________________________________
Upstream point/station elevation =   372.500(Ft.)
Downstream point/station elevation =   370.600(Ft.)
Pipe length  =   487.40(Ft.)   Manning's N = 0.013
No. of pipes = 1  Required pipe flow  =    10.239(CFS)
Nearest computed pipe diameter  =     21.00(In.)
Calculated individual pipe flow  =    10.239(CFS)
Normal flow depth in pipe =   17.95(In.)
Flow top width inside pipe =   14.79(In.)
Critical Depth =   14.29(In.)
Pipe flow velocity =      4.68(Ft/s)
Travel time through pipe =    1.74 min.
Time of concentration (TC) =    11.70 min.


++++++++++++++++++++++++++++++++++++++++++++++++++++++++++++++++++++++
Process from Point/Station        1.110 to Point/Station        1.120
**** SUBAREA FLOW ADDITION ****
______________________________________________________________________
COMMERCIAL subarea type
Runoff Coefficient = 0.874
Decimal fraction soil group A = 0.300
Decimal fraction soil group B = 0.700
Decimal fraction soil group C = 0.000
Decimal fraction soil group D = 0.000
RI index for soil(AMC 2)  =  48.80
Pervious area fraction =  0.100; Impervious fraction =  0.900
Time of concentration =    11.70 min.
Rainfall intensity =      3.532(In/Hr) for a   100.0 year storm
Subarea runoff =      5.634(CFS) for      1.824(Ac.)
Total runoff =     15.872(CFS)  Total area =       4.866(Ac.)


++++++++++++++++++++++++++++++++++++++++++++++++++++++++++++++++++++++
```

```
Process from Point/Station        1.120 to Point/Station        1.130
**** PIPEFLOW TRAVEL TIME (Program estimated size) ****
______________________________________________________________________
Upstream point/station elevation =   370.600(Ft.)
Downstream point/station elevation =   370.300(Ft.)
Pipe length  =    73.70(Ft.)   Manning's N = 0.013
No. of pipes = 1  Required pipe flow  =    15.872(CFS)
Nearest computed pipe diameter  =     27.00(In.)
Calculated individual pipe flow  =    15.872(CFS)
Normal flow depth in pipe =   18.33(In.)
Flow top width inside pipe =   25.21(In.)
Critical Depth =   16.69(In.)
Pipe flow velocity =      5.53(Ft/s)
Travel time through pipe =    0.22 min.
Time of concentration (TC) =    11.93 min.


++++++++++++++++++++++++++++++++++++++++++++++++++++++++++++++++++++++
Process from Point/Station        1.120 to Point/Station        1.130
**** SUBAREA FLOW ADDITION ****
______________________________________________________________________
COMMERCIAL subarea type
Runoff Coefficient = 0.878
Decimal fraction soil group A = 0.110
Decimal fraction soil group B = 0.890
Decimal fraction soil group C = 0.000
Decimal fraction soil group D = 0.000
RI index for soil(AMC 2)  =  53.36
Pervious area fraction =  0.100; Impervious fraction =  0.900
Time of concentration =    11.93 min.
Rainfall intensity =      3.499(In/Hr) for a   100.0 year storm
Subarea runoff =     25.147(CFS) for      8.190(Ac.)
Total runoff =     41.020(CFS)  Total area =      13.056(Ac.)


++++++++++++++++++++++++++++++++++++++++++++++++++++++++++++++++++++++
Process from Point/Station        1.130 to Point/Station        1.140
**** PIPEFLOW TRAVEL TIME (Program estimated size) ****
______________________________________________________________________
Upstream point/station elevation =   370.300(Ft.)
Downstream point/station elevation =   366.600(Ft.)
Pipe length  =   930.20(Ft.)   Manning's N = 0.013
No. of pipes = 1  Required pipe flow  =    41.020(CFS)
Nearest computed pipe diameter  =     36.00(In.)
Calculated individual pipe flow  =    41.020(CFS)
Normal flow depth in pipe =   28.73(In.)
Flow top width inside pipe =   28.90(In.)
Critical Depth =   25.03(In.)
Pipe flow velocity =      6.78(Ft/s)
Travel time through pipe =    2.29 min.
Time of concentration (TC) =    14.21 min.


++++++++++++++++++++++++++++++++++++++++++++++++++++++++++++++++++++++
```

```
Process from Point/Station        1.130 to Point/Station        1.140
**** SUBAREA FLOW ADDITION ****
____________________________________________________________________
COMMERCIAL subarea type
Runoff Coefficient = 0.872
Decimal fraction soil group A = 0.310
Decimal fraction soil group B = 0.690
Decimal fraction soil group C = 0.000
Decimal fraction soil group D = 0.000
RI index for soil(AMC 2)  =  48.56
Pervious area fraction =  0.100; Impervious fraction =  0.900
Time of concentration =    14.21 min.
Rainfall intensity =      3.205(In/Hr) for a   100.0 year storm
Subarea runoff =     15.541(CFS) for      5.557(Ac.)
Total runoff =     56.560(CFS)  Total area =      18.613(Ac.)


++++++++++++++++++++++++++++++++++++++++++++++++++++++++++++++++++++++
Process from Point/Station        1.140 to Point/Station        1.150
**** PIPEFLOW TRAVEL TIME (Program estimated size) ****
____________________________________________________________________
Upstream point/station elevation =   366.600(Ft.)
Downstream point/station elevation =   365.600(Ft.)
Pipe length  =   241.40(Ft.)   Manning's N = 0.013
No. of pipes = 1  Required pipe flow  =    56.560(CFS)
Nearest computed pipe diameter  =     39.00(In.)
Calculated individual pipe flow  =    56.560(CFS)
Normal flow depth in pipe =   35.06(In.)
Flow top width inside pipe =   23.50(In.)
Critical Depth =   28.79(In.)
Pipe flow velocity =      7.20(Ft/s)
Travel time through pipe =    0.56 min.
Time of concentration (TC) =    14.77 min.


++++++++++++++++++++++++++++++++++++++++++++++++++++++++++++++++++++++
Process from Point/Station        1.140 to Point/Station        1.150
**** SUBAREA FLOW ADDITION ****
____________________________________________________________________
COMMERCIAL subarea type
Runoff Coefficient = 0.874
Decimal fraction soil group A = 0.200
Decimal fraction soil group B = 0.800
Decimal fraction soil group C = 0.000
Decimal fraction soil group D = 0.000
RI index for soil(AMC 2)  =  51.20
Pervious area fraction =  0.100; Impervious fraction =  0.900
Time of concentration =    14.77 min.
Rainfall intensity =      3.144(In/Hr) for a   100.0 year storm
Subarea runoff =      2.232(CFS) for      0.812(Ac.)
Total runoff =     58.792(CFS)  Total area =      19.425(Ac.)


++++++++++++++++++++++++++++++++++++++++++++++++++++++++++++++++++++++
```

```
Process from Point/Station        1.150 to Point/Station        1.090
**** PIPEFLOW TRAVEL TIME (Program estimated size) ****
______________________________________________________________________
Upstream point/station elevation =   365.600(Ft.)
Downstream point/station elevation =   365.000(Ft.)
Pipe length  =   161.20(Ft.)   Manning's N = 0.013
No. of pipes = 1  Required pipe flow  =    58.792(CFS)
Nearest computed pipe diameter  =     42.00(In.)
Calculated individual pipe flow  =    58.792(CFS)
Normal flow depth in pipe =   32.91(In.)
Flow top width inside pipe =   34.60(In.)
Critical Depth =   28.84(In.)
Pipe flow velocity =      7.26(Ft/s)
Travel time through pipe =    0.37 min.
Time of concentration (TC) =    15.14 min.


++++++++++++++++++++++++++++++++++++++++++++++++++++++++++++++++++++++
Process from Point/Station        1.150 to Point/Station        1.090
**** CONFLUENCE OF MAIN STREAMS ****
______________________________________________________________________
The following data inside Main Stream is listed:
In Main Stream number: 2
Stream flow area =     19.425(Ac.)
Runoff from this stream =     58.792(CFS)
Time of concentration =   15.14 min.
Rainfall intensity =     3.106(In/Hr)
Program is now starting with Main Stream No. 3


++++++++++++++++++++++++++++++++++++++++++++++++++++++++++++++++++++++
Process from Point/Station        1.160 to Point/Station        1.170
**** INITIAL AREA EVALUATION ****
______________________________________________________________________
Initial area flow distance =   845.400(Ft.)
Top (of initial area) elevation =   375.000(Ft.)
Bottom (of initial area) elevation =   370.300(Ft.)
Difference in elevation =     4.700(Ft.)
Slope =    0.00556  s(percent)=       0.56
TC = k(0.300)*[(length^3)/(elevation change)]^0.2
Initial area time of concentration =   12.559 min.
Rainfall intensity =      3.410(In/Hr) for a   100.0 year storm
COMMERCIAL subarea type
Runoff Coefficient = 0.872
Decimal fraction soil group A = 0.420
Decimal fraction soil group B = 0.580
Decimal fraction soil group C = 0.000
Decimal fraction soil group D = 0.000
RI index for soil(AMC 2)  =  45.92
Pervious area fraction =  0.100; Impervious fraction =  0.900
Initial subarea runoff =      8.601(CFS)
Total initial stream area =        2.894(Ac.)
Pervious area fraction = 0.100
```

```
++++++++++++++++++++++++++++++++++++++++++++++++++++++++++++++++++++++
Process from Point/Station        1.170 to Point/Station        1.090
**** PIPEFLOW TRAVEL TIME (Program estimated size) ****
______________________________________________________________________
Upstream point/station elevation =   366.800(Ft.)
Downstream point/station elevation =   365.000(Ft.)
Pipe length  =    95.70(Ft.)   Manning's N = 0.013
No. of pipes = 1  Required pipe flow  =     8.601(CFS)
Nearest computed pipe diameter  =     15.00(In.)
Calculated individual pipe flow  =     8.601(CFS)
Normal flow depth in pipe =   11.93(In.)
Flow top width inside pipe =   12.10(In.)
Critical Depth =   13.69(In.)
Pipe flow velocity =      8.23(Ft/s)
Travel time through pipe =    0.19 min.
Time of concentration (TC) =    12.75 min.


++++++++++++++++++++++++++++++++++++++++++++++++++++++++++++++++++++++
Process from Point/Station        1.170 to Point/Station        1.090
**** CONFLUENCE OF MAIN STREAMS ****
______________________________________________________________________
The following data inside Main Stream is listed:
In Main Stream number: 3
Stream flow area =      2.894(Ac.)
Runoff from this stream =      8.601(CFS)
Time of concentration =   12.75 min.
Rainfall intensity =     3.384(In/Hr)
Program is now starting with Main Stream No. 4


++++++++++++++++++++++++++++++++++++++++++++++++++++++++++++++++++++++
Process from Point/Station        1.180 to Point/Station        1.190
**** INITIAL AREA EVALUATION ****
______________________________________________________________________
Initial area flow distance =   845.400(Ft.)
Top (of initial area) elevation =   375.000(Ft.)
Bottom (of initial area) elevation =   370.300(Ft.)
Difference in elevation =     4.700(Ft.)
Slope =    0.00556  s(percent)=       0.56
TC = k(0.300)*[(length^3)/(elevation change)]^0.2
Initial area time of concentration =   12.559 min.
Rainfall intensity =      3.410(In/Hr) for a   100.0 year storm
COMMERCIAL subarea type
Runoff Coefficient = 0.870
Decimal fraction soil group A = 0.490
Decimal fraction soil group B = 0.510
Decimal fraction soil group C = 0.000
Decimal fraction soil group D = 0.000
RI index for soil(AMC 2)  =  44.24
Pervious area fraction =  0.100; Impervious fraction =  0.900
Initial subarea runoff =     25.948(CFS)
Total initial stream area =        8.744(Ac.)
```

```
Pervious area fraction = 0.100


++++++++++++++++++++++++++++++++++++++++++++++++++++++++++++++++++++++
Process from Point/Station        1.190 to Point/Station        1.090
**** PIPEFLOW TRAVEL TIME (Program estimated size) ****
______________________________________________________________________
Upstream point/station elevation =   366.800(Ft.)
Downstream point/station elevation =   365.000(Ft.)
Pipe length  =    18.70(Ft.)   Manning's N = 0.013
No. of pipes = 1  Required pipe flow  =    25.948(CFS)
Nearest computed pipe diameter  =     18.00(In.)
Calculated individual pipe flow  =    25.948(CFS)
Normal flow depth in pipe =   12.14(In.)
Flow top width inside pipe =   16.87(In.)
Critical depth could not be calculated.
Pipe flow velocity =     20.47(Ft/s)
Travel time through pipe =    0.02 min.
Time of concentration (TC) =    12.57 min.


++++++++++++++++++++++++++++++++++++++++++++++++++++++++++++++++++++++
Process from Point/Station        1.190 to Point/Station        1.090
**** CONFLUENCE OF MAIN STREAMS ****
______________________________________________________________________
The following data inside Main Stream is listed:
In Main Stream number: 4
Stream flow area =      8.744(Ac.)
Runoff from this stream =     25.948(CFS)
Time of concentration =   12.57 min.
Rainfall intensity =     3.408(In/Hr)
Summary of stream data:

Stream   Flow rate      TC            Rainfall Intensity
 No.       (CFS)       (min)                 (In/Hr)


1       63.480     14.53                 3.171
2       58.792     15.14                 3.106
3        8.601     12.75                 3.384
4       25.948     12.57                 3.408
Largest stream flow has longer or shorter time of concentration
Qp =     63.480 + sum of
          Qa          Tb/Ta
          58.792 *    0.959 =     56.406
          Qb         Ia/Ib
           8.601 *    0.937 =      8.059
          Qb         Ia/Ib
          25.948 *    0.930 =     24.142
Qp =    152.087

Total of 4 main streams to confluence:
Flow rates before confluence point:
      63.480      58.792       8.601      25.948
```

```
Area of streams before confluence:
       21.003       19.425        2.894        8.744


Results of confluence:
Total flow rate =    152.087(CFS)
Time of concentration =    14.526 min.
Effective stream area after confluence  =     52.066(Ac.)


++++++++++++++++++++++++++++++++++++++++++++++++++++++++++++++++++++++
Process from Point/Station        1.190 to Point/Station        1.090
**** SUBAREA FLOW ADDITION ****
______________________________________________________________________
UNDEVELOPED (good cover) subarea
Runoff Coefficient = 0.695
Decimal fraction soil group A = 0.100
Decimal fraction soil group B = 0.900
Decimal fraction soil group C = 0.000
Decimal fraction soil group D = 0.000
RI index for soil(AMC 2)  =  58.70
Pervious area fraction =  1.000; Impervious fraction =  0.000
Time of concentration =    14.53 min.
Rainfall intensity =      3.171(In/Hr) for a   100.0 year storm
Subarea runoff =      6.086(CFS) for      2.764(Ac.)
Total runoff =    158.173(CFS)  Total area =      54.830(Ac.)


++++++++++++++++++++++++++++++++++++++++++++++++++++++++++++++++++++++
Process from Point/Station        1.090 to Point/Station        1.200
**** PIPEFLOW TRAVEL TIME (Program estimated size) ****
______________________________________________________________________
Upstream point/station elevation =   365.000(Ft.)
Downstream point/station elevation =   364.200(Ft.)
Pipe length  =   205.00(Ft.)   Manning's N = 0.013
No. of pipes = 1  Required pipe flow  =   158.173(CFS)
Nearest computed pipe diameter  =     60.00(In.)
Calculated individual pipe flow  =   158.173(CFS)
Normal flow depth in pipe =   47.72(In.)
Flow top width inside pipe =   48.42(In.)
Critical Depth =   43.27(In.)
Pipe flow velocity =      9.44(Ft/s)
Travel time through pipe =    0.36 min.
Time of concentration (TC) =    14.89 min.


++++++++++++++++++++++++++++++++++++++++++++++++++++++++++++++++++++++
Process from Point/Station        1.090 to Point/Station        1.200
**** SUBAREA FLOW ADDITION ****
______________________________________________________________________
UNDEVELOPED (good cover) subarea
Runoff Coefficient = 0.707
Decimal fraction soil group A = 0.000
Decimal fraction soil group B = 1.000
```

```
Decimal fraction soil group C = 0.000
Decimal fraction soil group D = 0.000
RI index for soil(AMC 2)  =  61.00
Pervious area fraction =  1.000; Impervious fraction =  0.000
Time of concentration =    14.89 min.
Rainfall intensity =      3.132(In/Hr) for a   100.0 year storm
Subarea runoff =      2.324(CFS) for      1.049(Ac.)
Total runoff =    160.497(CFS)  Total area =      55.879(Ac.)


++++++++++++++++++++++++++++++++++++++++++++++++++++++++++++++++++++++
Process from Point/Station        1.200 to Point/Station        1.210
**** PIPEFLOW TRAVEL TIME (Program estimated size) ****
______________________________________________________________________
Upstream point/station elevation =   364.200(Ft.)
Downstream point/station elevation =   363.200(Ft.)
Pipe length  =   260.80(Ft.)   Manning's N = 0.013
No. of pipes = 1  Required pipe flow  =   160.497(CFS)
Nearest computed pipe diameter  =     60.00(In.)
Calculated individual pipe flow  =   160.497(CFS)
Normal flow depth in pipe =   48.94(In.)
Flow top width inside pipe =   46.53(In.)
Critical Depth =   43.59(In.)
Pipe flow velocity =      9.36(Ft/s)
Travel time through pipe =    0.46 min.
Time of concentration (TC) =    15.35 min.


++++++++++++++++++++++++++++++++++++++++++++++++++++++++++++++++++++++
Process from Point/Station        1.200 to Point/Station        1.210
**** SUBAREA FLOW ADDITION ****
______________________________________________________________________
UNDEVELOPED (good cover) subarea
Runoff Coefficient = 0.701
Decimal fraction soil group A = 0.100
Decimal fraction soil group B = 0.810
Decimal fraction soil group C = 0.000
Decimal fraction soil group D = 0.090
RI index for soil(AMC 2)  =  60.41
Pervious area fraction =  1.000; Impervious fraction =  0.000
Time of concentration =    15.35 min.
Rainfall intensity =      3.084(In/Hr) for a   100.0 year storm
Subarea runoff =     12.043(CFS) for      5.568(Ac.)
Total runoff =    172.540(CFS)  Total area =      61.447(Ac.)


++++++++++++++++++++++++++++++++++++++++++++++++++++++++++++++++++++++
Process from Point/Station        1.210 to Point/Station        1.220
**** PIPEFLOW TRAVEL TIME (Program estimated size) ****
______________________________________________________________________
Upstream point/station elevation =   363.200(Ft.)
Downstream point/station elevation =   362.000(Ft.)
Pipe length  =   287.40(Ft.)   Manning's N = 0.013
No. of pipes = 1  Required pipe flow  =   172.540(CFS)
```

```
Nearest computed pipe diameter  =     60.00(In.)
Calculated individual pipe flow  =   172.540(CFS)
Normal flow depth in pipe =   50.63(In.)
Flow top width inside pipe =   43.57(In.)
Critical Depth =   45.14(In.)
Pipe flow velocity =      9.76(Ft/s)
Travel time through pipe =    0.49 min.
Time of concentration (TC) =    15.84 min.


++++++++++++++++++++++++++++++++++++++++++++++++++++++++++++++++++++++
Process from Point/Station        1.210 to Point/Station        1.220
**** SUBAREA FLOW ADDITION ****
______________________________________________________________________
UNDEVELOPED (good cover) subarea
Runoff Coefficient = 0.662
Decimal fraction soil group A = 0.260
Decimal fraction soil group B = 0.740
Decimal fraction soil group C = 0.000
Decimal fraction soil group D = 0.000
RI index for soil(AMC 2)  =  55.02
Pervious area fraction =  1.000; Impervious fraction =  0.000
Time of concentration =    15.84 min.
Rainfall intensity =      3.036(In/Hr) for a   100.0 year storm
Subarea runoff =      7.203(CFS) for      3.583(Ac.)
Total runoff =    179.743(CFS)  Total area =      65.030(Ac.)


++++++++++++++++++++++++++++++++++++++++++++++++++++++++++++++++++++++
Process from Point/Station        1.220 to Point/Station        1.230
**** PIPEFLOW TRAVEL TIME (Program estimated size) ****
______________________________________________________________________
Upstream point/station elevation =   362.000(Ft.)
Downstream point/station elevation =   360.500(Ft.)
Pipe length  =   365.70(Ft.)   Manning's N = 0.013
No. of pipes = 1  Required pipe flow  =   179.743(CFS)
Nearest computed pipe diameter  =     63.00(In.)
Calculated individual pipe flow  =   179.743(CFS)
Normal flow depth in pipe =   48.84(In.)
Flow top width inside pipe =   52.59(In.)
Critical Depth =   45.58(In.)
Pipe flow velocity =      9.98(Ft/s)
Travel time through pipe =    0.61 min.
Time of concentration (TC) =    16.45 min.


++++++++++++++++++++++++++++++++++++++++++++++++++++++++++++++++++++++
Process from Point/Station        1.220 to Point/Station        1.230
**** SUBAREA FLOW ADDITION ****
______________________________________________________________________
UNDEVELOPED (good cover) subarea
Runoff Coefficient = 0.600
Decimal fraction soil group A = 0.600
Decimal fraction soil group B = 0.400
```

```
Decimal fraction soil group C = 0.000
Decimal fraction soil group D = 0.000
RI index for soil(AMC 2)  =  47.20
Pervious area fraction =  1.000; Impervious fraction =  0.000
Time of concentration =    16.45 min.
Rainfall intensity =      2.979(In/Hr) for a   100.0 year storm
Subarea runoff =      3.432(CFS) for      1.921(Ac.)
Total runoff =    183.175(CFS)  Total area =      66.951(Ac.)


++++++++++++++++++++++++++++++++++++++++++++++++++++++++++++++++++++++
Process from Point/Station        1.230 to Point/Station        1.240
**** PIPEFLOW TRAVEL TIME (Program estimated size) ****
______________________________________________________________________
Upstream point/station elevation =   360.500(Ft.)
Downstream point/station elevation =   290.000(Ft.)
Pipe length  =   700.30(Ft.)   Manning's N = 0.013
No. of pipes = 1  Required pipe flow  =   183.175(CFS)
Nearest computed pipe diameter  =     36.00(In.)
Calculated individual pipe flow  =   183.175(CFS)
Normal flow depth in pipe =   25.88(In.)
Flow top width inside pipe =   32.37(In.)
Critical depth could not be calculated.
Pipe flow velocity =     33.70(Ft/s)
Travel time through pipe =    0.35 min.
Time of concentration (TC) =    16.80 min.


++++++++++++++++++++++++++++++++++++++++++++++++++++++++++++++++++++++
Process from Point/Station        1.240 to Point/Station        1.250
**** NATURAL CHANNEL TIME + SUBAREA FLOW ADDITION ****
______________________________________________________________________
Top of natural channel elevation =    290.000(Ft.)
End of natural channel elevation =    230.000(Ft.)
Length of natural channel  =  1734.100(Ft.)
Estimated mean flow rate at midpoint of channel =    334.327(CFS)

Natural valley channel type used
L.A. County flood control district formula for channel velocity:
 Velocity(ft/s) = (7 + 8(q(English Units)^.352)(slope^0.5)
Velocity using mean channel flow =  12.81(Ft/s)

Correction to map slope used on extremely rugged channels with
drops and waterfalls (Plate D-6.2)
        Normal channel slope =  0.0346
Corrected/adjusted channel slope =  0.0346
Travel time =    2.26 min.     TC =   19.06  min.


 Adding area flow to channel
UNDEVELOPED (poor cover) subarea
Runoff Coefficient = 0.801
Decimal fraction soil group A = 0.300
Decimal fraction soil group B = 0.260
```

```
Decimal fraction soil group C = 0.000
Decimal fraction soil group D = 0.440
RI index for soil(AMC 2)  =  79.54
Pervious area fraction =  1.000; Impervious fraction =  0.000
Rainfall intensity =      2.768(In/Hr) for a   100.0 year storm
Subarea runoff =    244.932(CFS) for    110.493(Ac.)
Total runoff =    428.107(CFS)  Total area =     177.444(Ac.)


++++++++++++++++++++++++++++++++++++++++++++++++++++++++++++++++++++++
Process from Point/Station        1.250 to Point/Station        1.260
**** PIPEFLOW TRAVEL TIME (Program estimated size) ****
______________________________________________________________________
Upstream point/station elevation =   230.000(Ft.)
Downstream point/station elevation =   218.900(Ft.)
Pipe length  =   118.50(Ft.)   Manning's N = 0.013
No. of pipes = 1  Required pipe flow  =   428.107(CFS)
Nearest computed pipe diameter  =     48.00(In.)
Calculated individual pipe flow  =   428.107(CFS)
Normal flow depth in pipe =   38.25(In.)
Flow top width inside pipe =   38.62(In.)
Critical depth could not be calculated.
Pipe flow velocity =     39.87(Ft/s)
Travel time through pipe =    0.05 min.
Time of concentration (TC) =    19.10 min.
End of computations, total study area =          177.44 (Ac.)
The following figures may
be used for a unit hydrograph study of the same area.

Area averaged pervious area fraction(Ap) = 0.736
Area averaged RI index number =  69.2
```

```
              Riverside County Rational Hydrology Program

CIVILCADD/CIVILDESIGN Engineering Software,(c) 1989 - 2005 Version 7.1
       Rational Hydrology Study        Date: 11/03/20  File:AREA02.out
------------------------------------------------------------------------
BEAUMONT POINTE
PRELIMINARY HYDROLOGY STUDY
AREA 2 DEVELOPED
100-YEAR
------------------------------------------------------------------------
 *********   Hydrology Study Control Information **********

 English (in-lb) Units used in input data file

------------------------------------------------------------------------


Program License Serial Number 6094

------------------------------------------------------------------------
Rational Method Hydrology Program based on
Riverside County Flood Control & Water Conservation District
1978 hydrology manual

Storm event (year) =  100.00 Antecedent Moisture Condition = 3

2 year, 1 hour precipitation =  0.551(In.)
100 year, 1 hour precipitation =  1.560(In.)

Storm event year = 100.0
Calculated rainfall intensity data:
1 hour intensity =  1.560(In/Hr)
Slope of intensity duration curve = 0.5000




++++++++++++++++++++++++++++++++++++++++++++++++++++++++++++++++++++++
Process from Point/Station        2.000 to Point/Station        2.010
**** INITIAL AREA EVALUATION ****
______________________________________________________________________
Initial area flow distance =   584.200(Ft.)
Top (of initial area) elevation =  2390.000(Ft.)
Bottom (of initial area) elevation =  2250.000(Ft.)
Difference in elevation =   140.000(Ft.)
Slope =    0.23964  s(percent)=      23.96
TC = k(0.530)*[(length^3)/(elevation change)]^0.2
Initial area time of concentration =    9.015 min.
Rainfall intensity =      4.024(In/Hr) for a   100.0 year storm
UNDEVELOPED (poor cover) subarea
Runoff Coefficient = 0.855
Decimal fraction soil group A = 0.520
Decimal fraction soil group B = 0.480
Decimal fraction soil group C = 0.000
Decimal fraction soil group D = 0.000
RI index for soil(AMC 3)  =  86.37
Pervious area fraction =  1.000; Impervious fraction =  0.000
Initial subarea runoff =      8.994(CFS)
Total initial stream area =        2.613(Ac.)
Pervious area fraction = 1.000


++++++++++++++++++++++++++++++++++++++++++++++++++++++++++++++++++++++
Process from Point/Station        2.010 to Point/Station        2.020
```

```
**** PIPEFLOW TRAVEL TIME (Program estimated size) ****
_____________________________________________________________________
Upstream point/station elevation =  2250.000(Ft.)
Downstream point/station elevation =  2219.600(Ft.)
Pipe length  =   167.30(Ft.)   Manning's N = 0.013
No. of pipes = 1  Required pipe flow  =     8.994(CFS)
Nearest computed pipe diameter  =     12.00(In.)
Calculated individual pipe flow  =     8.994(CFS)
Normal flow depth in pipe =    6.64(In.)
Flow top width inside pipe =   11.93(In.)
Critical depth could not be calculated.
Pipe flow velocity =     20.15(Ft/s)
Travel time through pipe =    0.14 min.
Time of concentration (TC) =     9.15 min.
End of computations, total study area =            2.61 (Ac.)
The following figures may
be used for a unit hydrograph study of the same area.

Area averaged pervious area fraction(Ap) = 1.000
Area averaged RI index number =  72.3
```

```
                    Riverside County Rational Hydrology Program

        CIVILCADD/CIVILDESIGN Engineering Software,(c) 1989 - 2005 Version 7.1
                Rational Hydrology Study        Date: 02/23/23
File:Area03.out

----------------------------------------------------------------------
        BEAUMONT POINTE
        PRELIMINARY HYDROLOGY STUDY
        AREA 3 DEVELOPED
        100-YEAR

----------------------------------------------------------------------
         *********   Hydrology Study Control Information **********

         English (in-lb) Units used in input data file


----------------------------------------------------------------------


        Program License Serial Number 6094


----------------------------------------------------------------------
        Rational Method Hydrology Program based on
        Riverside County Flood Control & Water Conservation District
        1978 hydrology manual

        Storm event (year) =  100.00 Antecedent Moisture Condition = 3

        2 year, 1 hour precipitation =  0.551(In.)
        100 year, 1 hour precipitation =  1.560(In.)

        Storm event year = 100.0
        Calculated rainfall intensity data:
        1 hour intensity =  1.560(In/Hr)
        Slope of intensity duration curve = 0.5000




        ++++++++++++++++++++++++++++++++++++++++++++++++++++++++++++++++++++++
        Process from Point/Station        3.000 to Point/Station        3.010
        **** INITIAL AREA EVALUATION ****
        ______________________________________________________________________
        Initial area flow distance =   965.600(Ft.)
        Top (of initial area) elevation =  2390.000(Ft.)
        Bottom (of initial area) elevation =  2224.800(Ft.)
        Difference in elevation =   165.200(Ft.)
        Slope =    0.17109  s(percent)=      17.11
        TC = k(0.530)*[(length^3)/(elevation change)]^0.2
```

```
Initial area time of concentration =   11.791 min.
Rainfall intensity =      3.519(In/Hr) for a   100.0 year storm
UNDEVELOPED (poor cover) subarea
Runoff Coefficient = 0.853
Decimal fraction soil group A = 0.360
Decimal fraction soil group B = 0.640
Decimal fraction soil group C = 0.000
Decimal fraction soil group D = 0.000
RI index for soil(AMC 3)  =  87.42
Pervious area fraction =  1.000; Impervious fraction =  0.000
Initial subarea runoff =     20.973(CFS)
Total initial stream area =        6.983(Ac.)
Pervious area fraction = 1.000


++++++++++++++++++++++++++++++++++++++++++++++++++++++++++++++++++++++
Process from Point/Station        3.010 to Point/Station        3.020
**** PIPEFLOW TRAVEL TIME (Program estimated size) ****
______________________________________________________________________
Upstream point/station elevation =  2224.800(Ft.)
Downstream point/station elevation =  2211.100(Ft.)
Pipe length  =   173.90(Ft.)   Manning's N = 0.013
No. of pipes = 1  Required pipe flow  =    20.973(CFS)
Nearest computed pipe diameter  =     18.00(In.)
Calculated individual pipe flow  =    20.973(CFS)
Normal flow depth in pipe =   11.21(In.)
Flow top width inside pipe =   17.45(In.)
Critical depth could not be calculated.
Pipe flow velocity =     18.11(Ft/s)
Travel time through pipe =    0.16 min.
Time of concentration (TC) =    11.95 min.
End of computations, total study area =            6.98 (Ac.)
The following figures may
be used for a unit hydrograph study of the same area.

Area averaged pervious area fraction(Ap) = 1.000
Area averaged RI index number =  74.0
```

```
              Riverside County Rational Hydrology Program

CIVILCADD/CIVILDESIGN Engineering Software,(c) 1989 - 2005 Version 7.1
       Rational Hydrology Study        Date: 11/03/20  File:AREA04.out
------------------------------------------------------------------------
BEAUMONT POINTE
PRELIMINARY HYDROLOGY STUDY
AREA 4 DEVELOPED
100-YEAR
------------------------------------------------------------------------
 *********   Hydrology Study Control Information **********

 English (in-lb) Units used in input data file

------------------------------------------------------------------------


Program License Serial Number 6094

------------------------------------------------------------------------
Rational Method Hydrology Program based on
Riverside County Flood Control & Water Conservation District
1978 hydrology manual

Storm event (year) =  100.00 Antecedent Moisture Condition = 3

2 year, 1 hour precipitation =  0.551(In.)
100 year, 1 hour precipitation =  1.560(In.)

Storm event year = 100.0
Calculated rainfall intensity data:
1 hour intensity =  1.560(In/Hr)
Slope of intensity duration curve = 0.5000




++++++++++++++++++++++++++++++++++++++++++++++++++++++++++++++++++++++
Process from Point/Station        4.000 to Point/Station        4.010
**** INITIAL AREA EVALUATION ****
______________________________________________________________________
Initial area flow distance =   749.200(Ft.)
Top (of initial area) elevation =  2386.000(Ft.)
Bottom (of initial area) elevation =  2225.400(Ft.)
Difference in elevation =   160.600(Ft.)
Slope =    0.21436  s(percent)=      21.44
TC = k(0.530)*[(length^3)/(elevation change)]^0.2
Initial area time of concentration =   10.183 min.
Rainfall intensity =      3.787(In/Hr) for a   100.0 year storm
UNDEVELOPED (poor cover) subarea
Runoff Coefficient = 0.856
Decimal fraction soil group A = 0.380
Decimal fraction soil group B = 0.620
Decimal fraction soil group C = 0.000
Decimal fraction soil group D = 0.000
RI index for soil(AMC 3)  =  87.29
Pervious area fraction =  1.000; Impervious fraction =  0.000
Initial subarea runoff =     21.623(CFS)
Total initial stream area =        6.670(Ac.)
Pervious area fraction = 1.000


++++++++++++++++++++++++++++++++++++++++++++++++++++++++++++++++++++++
Process from Point/Station        4.010 to Point/Station        4.020
```

```
**** PIPEFLOW TRAVEL TIME (Program estimated size) ****
_____________________________________________________________________
Upstream point/station elevation =  2225.400(Ft.)
Downstream point/station elevation =  2214.400(Ft.)
Pipe length  =   145.90(Ft.)   Manning's N = 0.013
No. of pipes = 1  Required pipe flow  =    21.623(CFS)
Nearest computed pipe diameter  =     18.00(In.)
Calculated individual pipe flow  =    21.623(CFS)
Normal flow depth in pipe =   11.63(In.)
Flow top width inside pipe =   17.22(In.)
Critical depth could not be calculated.
Pipe flow velocity =     17.91(Ft/s)
Travel time through pipe =    0.14 min.
Time of concentration (TC) =    10.32 min.
End of computations, total study area =            6.67 (Ac.)
The following figures may
be used for a unit hydrograph study of the same area.

Area averaged pervious area fraction(Ap) = 1.000
Area averaged RI index number =  73.8
```

```
                Riverside County Rational Hydrology Program

CIVILCADD/CIVILDESIGN Engineering Software,(c) 1989 - 2005 Version 7.1
        Rational Hydrology Study        Date: 04/21/22  File:AREA45.out
------------------------------------------------------------------------
BEAUMONT POINTE
PRELIMINARY HYDROLOGY STUDY
AREA 45 DEVELOPED
100-YEAR
------------------------------------------------------------------------
 *********   Hydrology Study Control Information **********

 English (in-lb) Units used in input data file

------------------------------------------------------------------------


Program License Serial Number 6094

------------------------------------------------------------------------
Rational Method Hydrology Program based on
Riverside County Flood Control & Water Conservation District
1978 hydrology manual

Storm event (year) =  100.00 Antecedent Moisture Condition = 3

2 year, 1 hour precipitation =  0.551(In.)
100 year, 1 hour precipitation =  1.560(In.)

Storm event year = 100.0
Calculated rainfall intensity data:
1 hour intensity =  1.560(In/Hr)
Slope of intensity duration curve = 0.5000




++++++++++++++++++++++++++++++++++++++++++++++++++++++++++++++++++++++
Process from Point/Station       45.000 to Point/Station       45.010
**** INITIAL AREA EVALUATION ****
______________________________________________________________________
Initial area flow distance =   152.500(Ft.)
Top (of initial area) elevation =  2290.000(Ft.)
Bottom (of initial area) elevation =  2233.900(Ft.)
Difference in elevation =    56.100(Ft.)
Slope =    0.36787  s(percent)=      36.79
TC = k(0.530)*[(length^3)/(elevation change)]^0.2
Warning: TC computed to be less than 5 min.; program is assuming the
```

```
time of concentration is 5 minutes.
Initial area time of concentration =    5.000 min.
Rainfall intensity =      5.404(In/Hr) for a   100.0 year storm
UNDEVELOPED (poor cover) subarea
Runoff Coefficient = 0.875
Decimal fraction soil group A = 0.000
Decimal fraction soil group B = 1.000
Decimal fraction soil group C = 0.000
Decimal fraction soil group D = 0.000
RI index for soil(AMC 3)  =  89.80
Pervious area fraction =  1.000; Impervious fraction =  0.000
Initial subarea runoff =      1.803(CFS)
Total initial stream area =        0.381(Ac.)
Pervious area fraction = 1.000
End of computations, total study area =            0.38 (Ac.)
The following figures may
be used for a unit hydrograph study of the same area.

Area averaged pervious area fraction(Ap) = 1.000
Area averaged RI index number =  78.0
```

```
              Riverside County Rational Hydrology Program

CIVILCADD/CIVILDESIGN Engineering Software,(c) 1989 - 2005 Version 7.1
       Rational Hydrology Study        Date: 11/03/20  File:AREA05.out
------------------------------------------------------------------------
BEAUMONT POINTE
PRELIMINARY HYDROLOGY STUDY
AREA 5 DEVELOPED
100-YEAR
------------------------------------------------------------------------
 *********   Hydrology Study Control Information **********

 English (in-lb) Units used in input data file

------------------------------------------------------------------------


Program License Serial Number 6094

------------------------------------------------------------------------
Rational Method Hydrology Program based on
Riverside County Flood Control & Water Conservation District
1978 hydrology manual

Storm event (year) =  100.00 Antecedent Moisture Condition = 3

2 year, 1 hour precipitation =  0.551(In.)
100 year, 1 hour precipitation =  1.560(In.)

Storm event year = 100.0
Calculated rainfall intensity data:
1 hour intensity =  1.560(In/Hr)
Slope of intensity duration curve = 0.5000




++++++++++++++++++++++++++++++++++++++++++++++++++++++++++++++++++++++
Process from Point/Station        5.000 to Point/Station        5.010
**** INITIAL AREA EVALUATION ****
______________________________________________________________________
Initial area flow distance =   872.400(Ft.)
Top (of initial area) elevation =  2377.000(Ft.)
Bottom (of initial area) elevation =  2222.300(Ft.)
Difference in elevation =   154.700(Ft.)
Slope =    0.17733  s(percent)=      17.73
TC = k(0.530)*[(length^3)/(elevation change)]^0.2
Initial area time of concentration =   11.241 min.
Rainfall intensity =      3.604(In/Hr) for a   100.0 year storm
UNDEVELOPED (poor cover) subarea
Runoff Coefficient = 0.856
Decimal fraction soil group A = 0.290
Decimal fraction soil group B = 0.710
Decimal fraction soil group C = 0.000
Decimal fraction soil group D = 0.000
RI index for soil(AMC 3)  =  87.89
Pervious area fraction =  1.000; Impervious fraction =  0.000
Initial subarea runoff =     15.601(CFS)
Total initial stream area =        5.055(Ac.)
Pervious area fraction = 1.000


++++++++++++++++++++++++++++++++++++++++++++++++++++++++++++++++++++++
Process from Point/Station        5.010 to Point/Station        5.020
```

```
**** PIPEFLOW TRAVEL TIME (Program estimated size) ****
_____________________________________________________________________
Upstream point/station elevation =  2222.300(Ft.)
Downstream point/station elevation =  2215.500(Ft.)
Pipe length  =   145.70(Ft.)   Manning's N = 0.013
No. of pipes = 1  Required pipe flow  =    15.601(CFS)
Nearest computed pipe diameter  =     18.00(In.)
Calculated individual pipe flow  =    15.601(CFS)
Normal flow depth in pipe =   10.97(In.)
Flow top width inside pipe =   17.56(In.)
Critical Depth =   17.00(In.)
Pipe flow velocity =     13.84(Ft/s)
Travel time through pipe =    0.18 min.
Time of concentration (TC) =    11.42 min.
End of computations, total study area =            5.05 (Ac.)
The following figures may
be used for a unit hydrograph study of the same area.

Area averaged pervious area fraction(Ap) = 1.000
Area averaged RI index number =  74.8
```

```
                    Riverside County Rational Hydrology Program

        CIVILCADD/CIVILDESIGN Engineering Software,(c) 1989 - 2005 Version 7.1
                Rational Hydrology Study        Date: 02/22/23
File:Area06.out

------------------------------------------------------------------------
        BEAUMONT POINTE
        PRELIMINARY HYDROLOGY STUDY
        AREA 6 DEVELOPED
        100-YEAR

------------------------------------------------------------------------
         *********   Hydrology Study Control Information **********

         English (in-lb) Units used in input data file


------------------------------------------------------------------------


        Program License Serial Number 6094


------------------------------------------------------------------------
        Rational Method Hydrology Program based on
        Riverside County Flood Control & Water Conservation District
        1978 hydrology manual

        Storm event (year) =  100.00 Antecedent Moisture Condition = 3

        2 year, 1 hour precipitation =  0.551(In.)
        100 year, 1 hour precipitation =  1.560(In.)

        Storm event year = 100.0
        Calculated rainfall intensity data:
        1 hour intensity =  1.560(In/Hr)
        Slope of intensity duration curve = 0.5000




        ++++++++++++++++++++++++++++++++++++++++++++++++++++++++++++++++++++++
        Process from Point/Station        6.000 to Point/Station        6.010
        **** INITIAL AREA EVALUATION ****
        ______________________________________________________________________
        Initial area flow distance =   502.400(Ft.)
        Top (of initial area) elevation =  2370.500(Ft.)
        Bottom (of initial area) elevation =  2366.400(Ft.)
        Difference in elevation =     4.100(Ft.)
        Slope =    0.00816  s(percent)=       0.82
        TC = k(0.300)*[(length^3)/(elevation change)]^0.2
```

```
Initial area time of concentration =    9.445 min.
Rainfall intensity =      3.932(In/Hr) for a   100.0 year storm
COMMERCIAL subarea type
Runoff Coefficient = 0.883
Decimal fraction soil group A = 0.660
Decimal fraction soil group B = 0.340
Decimal fraction soil group C = 0.000
Decimal fraction soil group D = 0.000
RI index for soil(AMC 3)  =  60.16
Pervious area fraction =  0.100; Impervious fraction =  0.900
Initial subarea runoff =      8.744(CFS)
Total initial stream area =        2.517(Ac.)
Pervious area fraction = 0.100


++++++++++++++++++++++++++++++++++++++++++++++++++++++++++++++++++++++
Process from Point/Station        6.010 to Point/Station        6.020
**** PIPEFLOW TRAVEL TIME (Program estimated size) ****
______________________________________________________________________
Upstream point/station elevation =  2362.900(Ft.)
Downstream point/station elevation =  2355.100(Ft.)
Pipe length  =   784.00(Ft.)   Manning's N = 0.013
No. of pipes = 1  Required pipe flow  =     8.744(CFS)
Nearest computed pipe diameter  =     18.00(In.)
Calculated individual pipe flow  =     8.744(CFS)
Normal flow depth in pipe =   12.56(In.)
Flow top width inside pipe =   16.53(In.)
Critical Depth =   13.74(In.)
Pipe flow velocity =      6.63(Ft/s)
Travel time through pipe =    1.97 min.
Time of concentration (TC) =    11.41 min.


++++++++++++++++++++++++++++++++++++++++++++++++++++++++++++++++++++++
Process from Point/Station        6.020 to Point/Station        6.020
**** SUBAREA FLOW ADDITION ****
______________________________________________________________________
COMMERCIAL subarea type
Runoff Coefficient = 0.890
Decimal fraction soil group A = 0.000
Decimal fraction soil group B = 1.000
Decimal fraction soil group C = 0.000
Decimal fraction soil group D = 0.000
RI index for soil(AMC 3)  =  74.80
Pervious area fraction =  0.100; Impervious fraction =  0.900
Time of concentration =    11.41 min.
Rainfall intensity =      3.577(In/Hr) for a   100.0 year storm
Subarea runoff =      5.956(CFS) for      1.871(Ac.)
Total runoff =     14.699(CFS)  Total area =       4.388(Ac.)


++++++++++++++++++++++++++++++++++++++++++++++++++++++++++++++++++++++
Process from Point/Station        6.020 to Point/Station        6.030
**** PIPEFLOW TRAVEL TIME (Program estimated size) ****
```

```
Upstream point/station elevation =  2355.100(Ft.)
Downstream point/station elevation =  2350.500(Ft.)
Pipe length  =   224.70(Ft.)   Manning's N = 0.013
No. of pipes = 1  Required pipe flow  =    14.699(CFS)
Nearest computed pipe diameter  =     18.00(In.)
Calculated individual pipe flow  =    14.699(CFS)
Normal flow depth in pipe =   14.41(In.)
Flow top width inside pipe =   14.38(In.)
Critical Depth =   16.78(In.)
Pipe flow velocity =      9.69(Ft/s)
Travel time through pipe =    0.39 min.
Time of concentration (TC) =    11.80 min.


++++++++++++++++++++++++++++++++++++++++++++++++++++++++++++++++++++++
Process from Point/Station        6.020 to Point/Station        6.030
**** CONFLUENCE OF MAIN STREAMS ****
______________________________________________________________________
The following data inside Main Stream is listed:
In Main Stream number: 1
Stream flow area =      4.388(Ac.)
Runoff from this stream =     14.699(CFS)
Time of concentration =   11.80 min.
Rainfall intensity =     3.518(In/Hr)
Program is now starting with Main Stream No. 2


++++++++++++++++++++++++++++++++++++++++++++++++++++++++++++++++++++++
Process from Point/Station        6.040 to Point/Station        6.050
**** INITIAL AREA EVALUATION ****
______________________________________________________________________
Initial area flow distance =   468.000(Ft.)
Top (of initial area) elevation =  2370.200(Ft.)
Bottom (of initial area) elevation =  2367.600(Ft.)
Difference in elevation =     2.600(Ft.)
Slope =    0.00556  s(percent)=       0.56
TC = k(0.300)*[(length^3)/(elevation change)]^0.2
Initial area time of concentration =    9.915 min.
Rainfall intensity =      3.838(In/Hr) for a   100.0 year storm
COMMERCIAL subarea type
Runoff Coefficient = 0.882
Decimal fraction soil group A = 0.730
Decimal fraction soil group B = 0.270
Decimal fraction soil group C = 0.000
Decimal fraction soil group D = 0.000
RI index for soil(AMC 3)  =  58.48
Pervious area fraction =  0.100; Impervious fraction =  0.900
Initial subarea runoff =      0.765(CFS)
Total initial stream area =        0.226(Ac.)
Pervious area fraction = 0.100


++++++++++++++++++++++++++++++++++++++++++++++++++++++++++++++++++++++
```

```
Process from Point/Station        6.050 to Point/Station        6.060
**** STREET FLOW TRAVEL TIME + SUBAREA FLOW ADDITION ****
____________________________________________________________________
Top of street segment elevation =  2367.600(Ft.)
End of street segment elevation =  2358.400(Ft.)
Length of street segment  =   848.900(Ft.)
Height of curb above gutter flowline  =    6.0(In.)
Width of half street (curb to crown)  =  20.000(Ft.)
Distance from crown to crossfall grade break  =  18.000(Ft.)
Slope from gutter to grade break (v/hz) =   0.065
Slope from grade break to crown (v/hz)  =   0.020
Street flow is on [1] side(s) of the street
Distance from curb to property line  =   2.000(Ft.)
Slope from curb to property line (v/hz) =   0.020
Gutter width =   2.000(Ft.)
Gutter hike from flowline =  2.000(In.)
 Manning's N in gutter =  0.0150
 Manning's N from gutter to grade break =  0.0150
 Manning's N from grade break to crown =  0.0150
Estimated mean flow rate at midpoint of street =      1.382(CFS)
Depth of flow =   0.275(Ft.), Average velocity =   2.039(Ft/s)
Streetflow hydraulics at midpoint of street travel:
Halfstreet flow width =   7.423(Ft.)
Flow velocity =   2.04(Ft/s)
Travel time =    6.94 min.     TC =   16.85  min.
 Adding area flow to street
COMMERCIAL subarea type
Runoff Coefficient = 0.888
Decimal fraction soil group A = 0.000
Decimal fraction soil group B = 1.000
Decimal fraction soil group C = 0.000
Decimal fraction soil group D = 0.000
RI index for soil(AMC 3)  =  74.80
Pervious area fraction =  0.100; Impervious fraction =  0.900
Rainfall intensity =      2.944(In/Hr) for a   100.0 year storm
Subarea runoff =      1.148(CFS) for      0.439(Ac.)
Total runoff =      1.913(CFS)  Total area =       0.665(Ac.)
Street flow at end of street =      1.913(CFS)
Half street flow at end of street =      1.913(CFS)
Depth of flow =   0.300(Ft.), Average velocity =   2.187(Ft/s)
Flow width (from curb towards crown)=   8.648(Ft.)


++++++++++++++++++++++++++++++++++++++++++++++++++++++++++++++++++++++
Process from Point/Station        6.060 to Point/Station        6.070
**** PIPEFLOW TRAVEL TIME (Program estimated size) ****
____________________________________________________________________
Upstream point/station elevation =  2352.000(Ft.)
Downstream point/station elevation =  2351.300(Ft.)
Pipe length  =    70.40(Ft.)   Manning's N = 0.013
No. of pipes = 1  Required pipe flow  =     1.913(CFS)
Nearest computed pipe diameter  =     12.00(In.)
Calculated individual pipe flow  =     1.913(CFS)
Normal flow depth in pipe =    6.27(In.)
```

```
Flow top width inside pipe =   11.99(In.)
Critical Depth =    7.08(In.)
Pipe flow velocity =      4.61(Ft/s)
Travel time through pipe =    0.25 min.
Time of concentration (TC) =    17.11 min.


++++++++++++++++++++++++++++++++++++++++++++++++++++++++++++++++++++++
Process from Point/Station        6.070 to Point/Station        6.070
**** SUBAREA FLOW ADDITION ****
______________________________________________________________________
COMMERCIAL subarea type
Runoff Coefficient = 0.887
Decimal fraction soil group A = 0.110
Decimal fraction soil group B = 0.890
Decimal fraction soil group C = 0.000
Decimal fraction soil group D = 0.000
RI index for soil(AMC 3)  =  72.69
Pervious area fraction =  0.100; Impervious fraction =  0.900
Time of concentration =    17.11 min.
Rainfall intensity =      2.922(In/Hr) for a   100.0 year storm
Subarea runoff =      3.205(CFS) for      1.237(Ac.)
Total runoff =      5.118(CFS)  Total area =       1.902(Ac.)


++++++++++++++++++++++++++++++++++++++++++++++++++++++++++++++++++++++
Process from Point/Station        6.070 to Point/Station        6.030
**** PIPEFLOW TRAVEL TIME (Program estimated size) ****
______________________________________________________________________
Upstream point/station elevation =  2351.300(Ft.)
Downstream point/station elevation =  2350.500(Ft.)
Pipe length  =    75.20(Ft.)   Manning's N = 0.013
No. of pipes = 1  Required pipe flow  =     5.118(CFS)
Nearest computed pipe diameter  =     15.00(In.)
Calculated individual pipe flow  =     5.118(CFS)
Normal flow depth in pipe =    9.86(In.)
Flow top width inside pipe =   14.24(In.)
Critical Depth =   11.00(In.)
Pipe flow velocity =      5.99(Ft/s)
Travel time through pipe =    0.21 min.
Time of concentration (TC) =    17.32 min.


++++++++++++++++++++++++++++++++++++++++++++++++++++++++++++++++++++++
Process from Point/Station        6.070 to Point/Station        6.030
**** CONFLUENCE OF MAIN STREAMS ****
______________________________________________________________________
The following data inside Main Stream is listed:
In Main Stream number: 2
Stream flow area =      1.902(Ac.)
Runoff from this stream =      5.118(CFS)
Time of concentration =   17.32 min.
Rainfall intensity =     2.904(In/Hr)
Summary of stream data:
```

```
Stream   Flow rate      TC            Rainfall Intensity
 No.       (CFS)       (min)                 (In/Hr)


1       14.699     11.80                 3.518
2        5.118     17.32                 2.904
Largest stream flow has longer or shorter time of concentration
Qp =     14.699 + sum of
          Qa          Tb/Ta
           5.118 *    0.681 =      3.488
Qp =     18.187

Total of 2 main streams to confluence:
Flow rates before confluence point:
      14.699       5.118
Area of streams before confluence:
        4.388        1.902


Results of confluence:
Total flow rate =     18.187(CFS)
Time of concentration =    11.801 min.
Effective stream area after confluence  =      6.290(Ac.)


++++++++++++++++++++++++++++++++++++++++++++++++++++++++++++++++++++++
Process from Point/Station        6.030 to Point/Station        6.080
**** PIPEFLOW TRAVEL TIME (Program estimated size) ****
______________________________________________________________________
Upstream point/station elevation =  2350.500(Ft.)
Downstream point/station elevation =  2350.000(Ft.)
Pipe length  =    42.60(Ft.)   Manning's N = 0.013
No. of pipes = 1  Required pipe flow  =    18.187(CFS)
Nearest computed pipe diameter  =     24.00(In.)
Calculated individual pipe flow  =    18.187(CFS)
Normal flow depth in pipe =   15.40(In.)
Flow top width inside pipe =   23.02(In.)
Critical Depth =   18.43(In.)
Pipe flow velocity =      8.54(Ft/s)
Travel time through pipe =    0.08 min.
Time of concentration (TC) =    11.88 min.


++++++++++++++++++++++++++++++++++++++++++++++++++++++++++++++++++++++
Process from Point/Station        6.080 to Point/Station        6.080
**** SUBAREA FLOW ADDITION ****
______________________________________________________________________
UNDEVELOPED (good cover) subarea
Runoff Coefficient = 0.833
Decimal fraction soil group A = 0.000
Decimal fraction soil group B = 0.750
Decimal fraction soil group C = 0.000
Decimal fraction soil group D = 0.250
```

```
RI index for soil(AMC 3)  =  82.45
Pervious area fraction =  1.000; Impervious fraction =  0.000
Time of concentration =    11.88 min.
Rainfall intensity =      3.505(In/Hr) for a   100.0 year storm
Subarea runoff =      8.948(CFS) for      3.066(Ac.)
Total runoff =     27.135(CFS)  Total area =       9.356(Ac.)


++++++++++++++++++++++++++++++++++++++++++++++++++++++++++++++++++++++
Process from Point/Station        6.030 to Point/Station        6.080
**** CONFLUENCE OF MAIN STREAMS ****
______________________________________________________________________
The following data inside Main Stream is listed:
In Main Stream number: 1
Stream flow area =      9.356(Ac.)
Runoff from this stream =     27.135(CFS)
Time of concentration =   11.88 min.
Rainfall intensity =     3.505(In/Hr)
Program is now starting with Main Stream No. 2


++++++++++++++++++++++++++++++++++++++++++++++++++++++++++++++++++++++
Process from Point/Station        6.090 to Point/Station        6.100
**** INITIAL AREA EVALUATION ****
______________________________________________________________________
Initial area flow distance =   401.900(Ft.)
Top (of initial area) elevation =  2357.000(Ft.)
Bottom (of initial area) elevation =  2355.000(Ft.)
Difference in elevation =     2.000(Ft.)
Slope =    0.00498  s(percent)=       0.50
TC = k(0.300)*[(length^3)/(elevation change)]^0.2
Initial area time of concentration =    9.536 min.
Rainfall intensity =      3.913(In/Hr) for a   100.0 year storm
COMMERCIAL subarea type
Runoff Coefficient = 0.891
Decimal fraction soil group A = 0.000
Decimal fraction soil group B = 1.000
Decimal fraction soil group C = 0.000
Decimal fraction soil group D = 0.000
RI index for soil(AMC 3)  =  74.80
Pervious area fraction =  0.100; Impervious fraction =  0.900
Initial subarea runoff =      6.695(CFS)
Total initial stream area =        1.921(Ac.)
Pervious area fraction = 0.100


++++++++++++++++++++++++++++++++++++++++++++++++++++++++++++++++++++++
Process from Point/Station        6.100 to Point/Station        6.080
**** PIPEFLOW TRAVEL TIME (Program estimated size) ****
______________________________________________________________________
Upstream point/station elevation =  2351.500(Ft.)
Downstream point/station elevation =  2350.000(Ft.)
Pipe length  =    15.70(Ft.)   Manning's N = 0.013
No. of pipes = 1  Required pipe flow  =     6.695(CFS)
```

```
Nearest computed pipe diameter  =     12.00(In.)
Calculated individual pipe flow  =     6.695(CFS)
Normal flow depth in pipe =    6.76(In.)
Flow top width inside pipe =   11.90(In.)
Critical depth could not be calculated.
Pipe flow velocity =     14.70(Ft/s)
Travel time through pipe =    0.02 min.
Time of concentration (TC) =     9.55 min.


++++++++++++++++++++++++++++++++++++++++++++++++++++++++++++++++++++++
Process from Point/Station        6.100 to Point/Station        6.080
**** CONFLUENCE OF MAIN STREAMS ****
______________________________________________________________________
The following data inside Main Stream is listed:
In Main Stream number: 2
Stream flow area =      1.921(Ac.)
Runoff from this stream =      6.695(CFS)
Time of concentration =    9.55 min.
Rainfall intensity =     3.909(In/Hr)
Program is now starting with Main Stream No. 3


++++++++++++++++++++++++++++++++++++++++++++++++++++++++++++++++++++++
Process from Point/Station        6.110 to Point/Station        6.120
**** INITIAL AREA EVALUATION ****
______________________________________________________________________
Initial area flow distance =   647.400(Ft.)
Top (of initial area) elevation =  2369.900(Ft.)
Bottom (of initial area) elevation =  2360.100(Ft.)
Difference in elevation =     9.800(Ft.)
Slope =    0.01514  s(percent)=       1.51
TC = k(0.300)*[(length^3)/(elevation change)]^0.2
Initial area time of concentration =    9.238 min.
Rainfall intensity =      3.976(In/Hr) for a   100.0 year storm
COMMERCIAL subarea type
Runoff Coefficient = 0.890
Decimal fraction soil group A = 0.170
Decimal fraction soil group B = 0.810
Decimal fraction soil group C = 0.000
Decimal fraction soil group D = 0.020
RI index for soil(AMC 3)  =  71.84
Pervious area fraction =  0.100; Impervious fraction =  0.900
Initial subarea runoff =     29.806(CFS)
Total initial stream area =        8.428(Ac.)
Pervious area fraction = 0.100


++++++++++++++++++++++++++++++++++++++++++++++++++++++++++++++++++++++
Process from Point/Station        6.120 to Point/Station        6.080
**** PIPEFLOW TRAVEL TIME (Program estimated size) ****
______________________________________________________________________
Upstream point/station elevation =  2354.600(Ft.)
Downstream point/station elevation =  2350.000(Ft.)
```

```
Pipe length  =    24.90(Ft.)   Manning's N = 0.013
No. of pipes = 1  Required pipe flow  =    29.806(CFS)
Nearest computed pipe diameter  =     18.00(In.)
Calculated individual pipe flow  =    29.806(CFS)
Normal flow depth in pipe =   10.68(In.)
Flow top width inside pipe =   17.69(In.)
Critical depth could not be calculated.
Pipe flow velocity =     27.29(Ft/s)
Travel time through pipe =    0.02 min.
Time of concentration (TC) =     9.25 min.


++++++++++++++++++++++++++++++++++++++++++++++++++++++++++++++++++++++
Process from Point/Station        6.120 to Point/Station        6.080
**** CONFLUENCE OF MAIN STREAMS ****
______________________________________________________________________
The following data inside Main Stream is listed:
In Main Stream number: 3
Stream flow area =      8.428(Ac.)
Runoff from this stream =     29.806(CFS)
Time of concentration =    9.25 min.
Rainfall intensity =     3.972(In/Hr)
Program is now starting with Main Stream No. 4


++++++++++++++++++++++++++++++++++++++++++++++++++++++++++++++++++++++
Process from Point/Station        6.130 to Point/Station        6.140
**** INITIAL AREA EVALUATION ****
______________________________________________________________________
Initial area flow distance =   552.600(Ft.)
Top (of initial area) elevation =  2370.500(Ft.)
Bottom (of initial area) elevation =  2366.400(Ft.)
Difference in elevation =     4.100(Ft.)
Slope =    0.00742  s(percent)=       0.74
TC = k(0.300)*[(length^3)/(elevation change)]^0.2
Initial area time of concentration =   10.000 min.
Rainfall intensity =      3.821(In/Hr) for a   100.0 year storm
COMMERCIAL subarea type
Runoff Coefficient = 0.890
Decimal fraction soil group A = 0.070
Decimal fraction soil group B = 0.930
Decimal fraction soil group C = 0.000
Decimal fraction soil group D = 0.000
RI index for soil(AMC 3)  =  73.46
Pervious area fraction =  0.100; Impervious fraction =  0.900
Initial subarea runoff =      7.267(CFS)
Total initial stream area =        2.137(Ac.)
Pervious area fraction = 0.100


++++++++++++++++++++++++++++++++++++++++++++++++++++++++++++++++++++++
Process from Point/Station        6.140 to Point/Station        6.150
**** PIPEFLOW TRAVEL TIME (Program estimated size) ****
______________________________________________________________________
```

```
Upstream point/station elevation =  2360.900(Ft.)
Downstream point/station elevation =  2356.000(Ft.)
Pipe length  =   491.10(Ft.)   Manning's N = 0.013
No. of pipes = 1  Required pipe flow  =     7.267(CFS)
Nearest computed pipe diameter  =     18.00(In.)
Calculated individual pipe flow  =     7.267(CFS)
Normal flow depth in pipe =   11.02(In.)
Flow top width inside pipe =   17.54(In.)
Critical Depth =   12.53(In.)
Pipe flow velocity =      6.41(Ft/s)
Travel time through pipe =    1.28 min.
Time of concentration (TC) =    11.28 min.


++++++++++++++++++++++++++++++++++++++++++++++++++++++++++++++++++++++
Process from Point/Station        6.150 to Point/Station        6.150
**** SUBAREA FLOW ADDITION ****
______________________________________________________________________
SINGLE FAMILY (1/4 Acre Lot)
Runoff Coefficient = 0.859
Decimal fraction soil group A = 0.000
Decimal fraction soil group B = 0.750
Decimal fraction soil group C = 0.000
Decimal fraction soil group D = 0.250
RI index for soil(AMC 3)  =  78.60
Pervious area fraction =  0.500; Impervious fraction =  0.500
Time of concentration =    11.28 min.
Rainfall intensity =      3.598(In/Hr) for a   100.0 year storm
Subarea runoff =     10.111(CFS) for      3.272(Ac.)
Total runoff =     17.378(CFS)  Total area =       5.409(Ac.)


++++++++++++++++++++++++++++++++++++++++++++++++++++++++++++++++++++++
Process from Point/Station        6.150 to Point/Station        6.160
**** PIPEFLOW TRAVEL TIME (Program estimated size) ****
______________________________________________________________________
Upstream point/station elevation =  2356.000(Ft.)
Downstream point/station elevation =  2352.600(Ft.)
Pipe length  =   341.50(Ft.)   Manning's N = 0.013
No. of pipes = 1  Required pipe flow  =    17.378(CFS)
Nearest computed pipe diameter  =     24.00(In.)
Calculated individual pipe flow  =    17.378(CFS)
Normal flow depth in pipe =   15.80(In.)
Flow top width inside pipe =   22.77(In.)
Critical Depth =   18.02(In.)
Pipe flow velocity =      7.93(Ft/s)
Travel time through pipe =    0.72 min.
Time of concentration (TC) =    12.00 min.


++++++++++++++++++++++++++++++++++++++++++++++++++++++++++++++++++++++
Process from Point/Station        6.160 to Point/Station        6.160
**** SUBAREA FLOW ADDITION ****
______________________________________________________________________
```

```
COMMERCIAL subarea type
Runoff Coefficient = 0.891
Decimal fraction soil group A = 0.000
Decimal fraction soil group B = 0.820
Decimal fraction soil group C = 0.000
Decimal fraction soil group D = 0.180
RI index for soil(AMC 3)  =  77.54
Pervious area fraction =  0.100; Impervious fraction =  0.900
Time of concentration =    12.00 min.
Rainfall intensity =      3.489(In/Hr) for a   100.0 year storm
Subarea runoff =      6.513(CFS) for      2.095(Ac.)
Total runoff =     23.890(CFS)  Total area =       7.504(Ac.)


++++++++++++++++++++++++++++++++++++++++++++++++++++++++++++++++++++++
Process from Point/Station        6.160 to Point/Station        6.170
**** PIPEFLOW TRAVEL TIME (Program estimated size) ****
______________________________________________________________________
Upstream point/station elevation =  2352.600(Ft.)
Downstream point/station elevation =  2350.600(Ft.)
Pipe length  =   198.50(Ft.)   Manning's N = 0.013
No. of pipes = 1  Required pipe flow  =    23.890(CFS)
Nearest computed pipe diameter  =     27.00(In.)
Calculated individual pipe flow  =    23.890(CFS)
Normal flow depth in pipe =   17.74(In.)
Flow top width inside pipe =   25.63(In.)
Critical Depth =   20.52(In.)
Pipe flow velocity =      8.62(Ft/s)
Travel time through pipe =    0.38 min.
Time of concentration (TC) =    12.38 min.


++++++++++++++++++++++++++++++++++++++++++++++++++++++++++++++++++++++
Process from Point/Station        6.170 to Point/Station        6.170
**** SUBAREA FLOW ADDITION ****
______________________________________________________________________
COMMERCIAL subarea type
Runoff Coefficient = 0.895
Decimal fraction soil group A = 0.000
Decimal fraction soil group B = 0.030
Decimal fraction soil group C = 0.000
Decimal fraction soil group D = 0.970
RI index for soil(AMC 3)  =  87.66
Pervious area fraction =  0.100; Impervious fraction =  0.900
Time of concentration =    12.38 min.
Rainfall intensity =      3.434(In/Hr) for a   100.0 year storm
Subarea runoff =      2.823(CFS) for      0.918(Ac.)
Total runoff =     26.713(CFS)  Total area =       8.422(Ac.)


++++++++++++++++++++++++++++++++++++++++++++++++++++++++++++++++++++++
Process from Point/Station        6.170 to Point/Station        6.080
**** PIPEFLOW TRAVEL TIME (Program estimated size) ****
______________________________________________________________________
```

```
Upstream point/station elevation =  2350.600(Ft.)
Downstream point/station elevation =  2350.000(Ft.)
Pipe length  =    60.90(Ft.)   Manning's N = 0.013
No. of pipes = 1  Required pipe flow  =    26.713(CFS)
Nearest computed pipe diameter  =     27.00(In.)
Calculated individual pipe flow  =    26.713(CFS)
Normal flow depth in pipe =   19.45(In.)
Flow top width inside pipe =   24.23(In.)
Critical Depth =   21.62(In.)
Pipe flow velocity =      8.71(Ft/s)
Travel time through pipe =    0.12 min.
Time of concentration (TC) =    12.50 min.


++++++++++++++++++++++++++++++++++++++++++++++++++++++++++++++++++++++
Process from Point/Station        6.170 to Point/Station        6.080
**** CONFLUENCE OF MAIN STREAMS ****
______________________________________________________________________
The following data inside Main Stream is listed:
In Main Stream number: 4
Stream flow area =      8.422(Ac.)
Runoff from this stream =     26.713(CFS)
Time of concentration =   12.50 min.
Rainfall intensity =     3.418(In/Hr)
Program is now starting with Main Stream No. 5


++++++++++++++++++++++++++++++++++++++++++++++++++++++++++++++++++++++
Process from Point/Station        6.180 to Point/Station        6.190
**** INITIAL AREA EVALUATION ****
______________________________________________________________________
Initial area flow distance =   422.100(Ft.)
Top (of initial area) elevation =  2434.500(Ft.)
Bottom (of initial area) elevation =  2366.300(Ft.)
Difference in elevation =    68.200(Ft.)
Slope =    0.16157  s(percent)=      16.16
TC = k(0.940)*[(length^3)/(elevation change)]^0.2
Initial area time of concentration =   15.192 min.
Rainfall intensity =      3.100(In/Hr) for a   100.0 year storm
UNDEVELOPED (good cover) subarea
Runoff Coefficient = 0.860
Decimal fraction soil group A = 0.000
Decimal fraction soil group B = 0.060
Decimal fraction soil group C = 0.000
Decimal fraction soil group D = 0.940
RI index for soil(AMC 3)  =  90.32
Pervious area fraction =  1.000; Impervious fraction =  0.000
Initial subarea runoff =      1.787(CFS)
Total initial stream area =        0.670(Ac.)
Pervious area fraction = 1.000


++++++++++++++++++++++++++++++++++++++++++++++++++++++++++++++++++++++
Process from Point/Station        6.190 to Point/Station        6.200
```

```
**** STREET FLOW TRAVEL TIME + SUBAREA FLOW ADDITION ****
_____________________________________________________________________
Top of street segment elevation =  2366.300(Ft.)
End of street segment elevation =  2359.300(Ft.)
Length of street segment  =   663.000(Ft.)
Height of curb above gutter flowline  =    6.0(In.)
Width of half street (curb to crown)  =  28.000(Ft.)
Distance from crown to crossfall grade break  =  26.000(Ft.)
Slope from gutter to grade break (v/hz) =   0.065
Slope from grade break to crown (v/hz)  =   0.020
Street flow is on [1] side(s) of the street
Distance from curb to property line  =  13.000(Ft.)
Slope from curb to property line (v/hz) =   0.020
Gutter width =   2.000(Ft.)
Gutter hike from flowline =  2.000(In.)
 Manning's N in gutter =  0.0150
 Manning's N from gutter to grade break =  0.0150
 Manning's N from grade break to crown =  0.0150
Estimated mean flow rate at midpoint of street =      3.222(CFS)
Depth of flow =   0.345(Ft.), Average velocity =   2.437(Ft/s)
Streetflow hydraulics at midpoint of street travel:
Halfstreet flow width =  10.933(Ft.)
Flow velocity =   2.44(Ft/s)
Travel time =    4.53 min.     TC =   19.73  min.
 Adding area flow to street
MOBILE HOME PARK subarea type
Runoff Coefficient = 0.886
Decimal fraction soil group A = 0.000
Decimal fraction soil group B = 0.000
Decimal fraction soil group C = 0.000
Decimal fraction soil group D = 1.000
RI index for soil(AMC 3)  =  88.00
Pervious area fraction =  0.250; Impervious fraction =  0.750
Rainfall intensity =      2.721(In/Hr) for a   100.0 year storm
Subarea runoff =      2.793(CFS) for      1.159(Ac.)
Total runoff =      4.580(CFS)  Total area =       1.829(Ac.)
Street flow at end of street =      4.580(CFS)
Half street flow at end of street =      4.580(CFS)
Depth of flow =   0.380(Ft.), Average velocity =   2.647(Ft/s)
Flow width (from curb towards crown)=  12.665(Ft.)


++++++++++++++++++++++++++++++++++++++++++++++++++++++++++++++++++++++
Process from Point/Station        6.200 to Point/Station        6.210
**** PIPEFLOW TRAVEL TIME (Program estimated size) ****
_____________________________________________________________________
Upstream point/station elevation =  2354.600(Ft.)
Downstream point/station elevation =  2353.900(Ft.)
Pipe length  =    57.40(Ft.)   Manning's N = 0.013
No. of pipes = 1  Required pipe flow  =     4.580(CFS)
Nearest computed pipe diameter  =     15.00(In.)
Calculated individual pipe flow  =     4.580(CFS)
Normal flow depth in pipe =    8.74(In.)
Flow top width inside pipe =   14.79(In.)
```

```
Critical Depth =   10.42(In.)
Pipe flow velocity =      6.17(Ft/s)
Travel time through pipe =    0.16 min.
Time of concentration (TC) =    19.88 min.


++++++++++++++++++++++++++++++++++++++++++++++++++++++++++++++++++++++
Process from Point/Station        6.210 to Point/Station        6.210
**** SUBAREA FLOW ADDITION ****
______________________________________________________________________
COMMERCIAL subarea type
Runoff Coefficient = 0.891
Decimal fraction soil group A = 0.000
Decimal fraction soil group B = 0.590
Decimal fraction soil group C = 0.000
Decimal fraction soil group D = 0.410
RI index for soil(AMC 3)  =  81.03
Pervious area fraction =  0.100; Impervious fraction =  0.900
Time of concentration =    19.88 min.
Rainfall intensity =      2.710(In/Hr) for a   100.0 year storm
Subarea runoff =      4.229(CFS) for      1.752(Ac.)
Total runoff =      8.809(CFS)  Total area =       3.581(Ac.)


++++++++++++++++++++++++++++++++++++++++++++++++++++++++++++++++++++++
Process from Point/Station        6.210 to Point/Station        6.200
**** PIPEFLOW TRAVEL TIME (Program estimated size) ****
______________________________________________________________________
Upstream point/station elevation =  2353.900(Ft.)
Downstream point/station elevation =  2350.500(Ft.)
Pipe length  =   389.10(Ft.)   Manning's N = 0.013
No. of pipes = 1  Required pipe flow  =     8.809(CFS)
Nearest computed pipe diameter  =     18.00(In.)
Calculated individual pipe flow  =     8.809(CFS)
Normal flow depth in pipe =   13.31(In.)
Flow top width inside pipe =   15.80(In.)
Critical Depth =   13.78(In.)
Pipe flow velocity =      6.29(Ft/s)
Travel time through pipe =    1.03 min.
Time of concentration (TC) =    20.91 min.


++++++++++++++++++++++++++++++++++++++++++++++++++++++++++++++++++++++
Process from Point/Station        6.220 to Point/Station        6.220
**** SUBAREA FLOW ADDITION ****
______________________________________________________________________
COMMERCIAL subarea type
Runoff Coefficient = 0.890
Decimal fraction soil group A = 0.000
Decimal fraction soil group B = 0.640
Decimal fraction soil group C = 0.000
Decimal fraction soil group D = 0.360
RI index for soil(AMC 3)  =  80.27
Pervious area fraction =  0.100; Impervious fraction =  0.900
```

```
Time of concentration =    20.91 min.
Rainfall intensity =      2.642(In/Hr) for a   100.0 year storm
Subarea runoff =      5.299(CFS) for      2.253(Ac.)
Total runoff =     14.108(CFS)  Total area =       5.834(Ac.)


++++++++++++++++++++++++++++++++++++++++++++++++++++++++++++++++++++++
Process from Point/Station        6.220 to Point/Station        6.080
**** PIPEFLOW TRAVEL TIME (Program estimated size) ****
______________________________________________________________________
Upstream point/station elevation =  2350.500(Ft.)
Downstream point/station elevation =  2350.000(Ft.)
Pipe length  =    14.70(Ft.)   Manning's N = 0.013
No. of pipes = 1  Required pipe flow  =    14.108(CFS)
Nearest computed pipe diameter  =     18.00(In.)
Calculated individual pipe flow  =    14.108(CFS)
Normal flow depth in pipe =   11.39(In.)
Flow top width inside pipe =   17.35(In.)
Critical Depth =   16.61(In.)
Pipe flow velocity =     11.96(Ft/s)
Travel time through pipe =    0.02 min.
Time of concentration (TC) =    20.93 min.


++++++++++++++++++++++++++++++++++++++++++++++++++++++++++++++++++++++
Process from Point/Station        6.220 to Point/Station        6.080
**** CONFLUENCE OF MAIN STREAMS ****
______________________________________________________________________
The following data inside Main Stream is listed:
In Main Stream number: 5
Stream flow area =      5.834(Ac.)
Runoff from this stream =     14.108(CFS)
Time of concentration =   20.93 min.
Rainfall intensity =     2.641(In/Hr)
Summary of stream data:

Stream   Flow rate      TC            Rainfall Intensity
 No.       (CFS)       (min)                 (In/Hr)


1       27.135     11.88                 3.505
2        6.695      9.55                 3.909
3       29.806      9.25                 3.972
4       26.713     12.50                 3.418
5       14.108     20.93                 2.641
Largest stream flow has longer or shorter time of concentration
Qp =     29.806 + sum of
          Qa          Tb/Ta
          27.135 *    0.779 =     21.129
          Qa          Tb/Ta
           6.695 *    0.968 =      6.485
          Qa          Tb/Ta
          26.713 *    0.741 =     19.781
          Qa          Tb/Ta
```

```
          14.108 *    0.442 =      6.236
Qp =     83.437

Total of 5 main streams to confluence:
Flow rates before confluence point:
      27.135       6.695      29.806      26.713      14.108
Area of streams before confluence:
        9.356        1.921        8.428        8.422        5.834


Results of confluence:
Total flow rate =     83.437(CFS)
Time of concentration =     9.253 min.
Effective stream area after confluence  =     33.961(Ac.)


++++++++++++++++++++++++++++++++++++++++++++++++++++++++++++++++++++++
Process from Point/Station        6.080 to Point/Station        6.230
**** PIPEFLOW TRAVEL TIME (Program estimated size) ****
______________________________________________________________________
Upstream point/station elevation =  2345.000(Ft.)
Downstream point/station elevation =  2240.500(Ft.)
Pipe length  =  1735.70(Ft.)   Manning's N = 0.013
No. of pipes = 1  Required pipe flow  =    83.437(CFS)
Nearest computed pipe diameter  =     30.00(In.)
Calculated individual pipe flow  =    83.437(CFS)
Normal flow depth in pipe =   20.84(In.)
Flow top width inside pipe =   27.64(In.)
Critical depth could not be calculated.
Pipe flow velocity =     22.92(Ft/s)
Travel time through pipe =    1.26 min.
Time of concentration (TC) =    10.52 min.


++++++++++++++++++++++++++++++++++++++++++++++++++++++++++++++++++++++
Process from Point/Station        6.230 to Point/Station        6.240
**** NATURAL CHANNEL TIME + SUBAREA FLOW ADDITION ****
______________________________________________________________________
Top of natural channel elevation =   2240.500(Ft.)
End of natural channel elevation =   2225.200(Ft.)
Length of natural channel  =   331.500(Ft.)
Estimated mean flow rate at midpoint of channel =     95.700(CFS)

Natural valley channel type used
L.A. County flood control district formula for channel velocity:
 Velocity(ft/s) = (7 + 8(q(English Units)^.352)(slope^0.5)
Velocity using mean channel flow =  10.06(Ft/s)

Correction to map slope used on extremely rugged channels with
drops and waterfalls (Plate D-6.2)
        Normal channel slope =  0.0462
Corrected/adjusted channel slope =  0.0462
Travel time =    0.55 min.     TC =   11.06  min.
```

```
 Adding area flow to channel
UNDEVELOPED (poor cover) subarea
Runoff Coefficient = 0.847
Decimal fraction soil group A = 0.660
Decimal fraction soil group B = 0.340
Decimal fraction soil group C = 0.000
Decimal fraction soil group D = 0.000
RI index for soil(AMC 3)  =  85.44
Pervious area fraction =  1.000; Impervious fraction =  0.000
Rainfall intensity =      3.633(In/Hr) for a   100.0 year storm
Subarea runoff =     30.718(CFS) for      9.983(Ac.)
Total runoff =    114.155(CFS)  Total area =      43.944(Ac.)


++++++++++++++++++++++++++++++++++++++++++++++++++++++++++++++++++++++
Process from Point/Station        6.240 to Point/Station        6.250
**** PIPEFLOW TRAVEL TIME (Program estimated size) ****
______________________________________________________________________
Upstream point/station elevation =  2225.200(Ft.)
Downstream point/station elevation =  2222.100(Ft.)
Pipe length  =   154.30(Ft.)   Manning's N = 0.013
No. of pipes = 1  Required pipe flow  =   114.155(CFS)
Nearest computed pipe diameter  =     39.00(In.)
Calculated individual pipe flow  =   114.155(CFS)
Normal flow depth in pipe =   31.13(In.)
Flow top width inside pipe =   31.31(In.)
Critical depth could not be calculated.
Pipe flow velocity =     16.08(Ft/s)
Travel time through pipe =    0.16 min.
Time of concentration (TC) =    11.22 min.
End of computations, total study area =           43.94 (Ac.)
The following figures may
be used for a unit hydrograph study of the same area.

Area averaged pervious area fraction(Ap) = 0.415
Area averaged RI index number =  60.6
```

```
              Riverside County Rational Hydrology Program

CIVILCADD/CIVILDESIGN Engineering Software,(c) 1989 - 2005 Version 7.1
       Rational Hydrology Study        Date: 11/04/20  File:AREA07.out
------------------------------------------------------------------------
BEAUMONT POINTE
PRELIMINARY HYDROLOGY STUDY
AREA 7 DEVELOPED
100-YEAR
------------------------------------------------------------------------
 *********   Hydrology Study Control Information **********

 English (in-lb) Units used in input data file

------------------------------------------------------------------------


Program License Serial Number 6094

------------------------------------------------------------------------
Rational Method Hydrology Program based on
Riverside County Flood Control & Water Conservation District
1978 hydrology manual

Storm event (year) =  100.00 Antecedent Moisture Condition = 3

2 year, 1 hour precipitation =  0.551(In.)
100 year, 1 hour precipitation =  1.560(In.)

Storm event year = 100.0
Calculated rainfall intensity data:
1 hour intensity =  1.560(In/Hr)
Slope of intensity duration curve = 0.5000




++++++++++++++++++++++++++++++++++++++++++++++++++++++++++++++++++++++
Process from Point/Station        7.000 to Point/Station        7.010
**** INITIAL AREA EVALUATION ****
______________________________________________________________________
Initial area flow distance =   512.000(Ft.)
Top (of initial area) elevation =  2368.600(Ft.)
Bottom (of initial area) elevation =  2240.100(Ft.)
Difference in elevation =   128.500(Ft.)
Slope =    0.25098  s(percent)=      25.10
TC = k(0.530)*[(length^3)/(elevation change)]^0.2
Initial area time of concentration =    8.473 min.
Rainfall intensity =      4.151(In/Hr) for a   100.0 year storm
UNDEVELOPED (poor cover) subarea
Runoff Coefficient = 0.865
Decimal fraction soil group A = 0.170
Decimal fraction soil group B = 0.830
Decimal fraction soil group C = 0.000
Decimal fraction soil group D = 0.000
RI index for soil(AMC 3)  =  88.68
Pervious area fraction =  1.000; Impervious fraction =  0.000
Initial subarea runoff =     15.192(CFS)
Total initial stream area =        4.233(Ac.)
Pervious area fraction = 1.000


++++++++++++++++++++++++++++++++++++++++++++++++++++++++++++++++++++++
Process from Point/Station        7.010 to Point/Station        7.020
```

```
**** PIPEFLOW TRAVEL TIME (Program estimated size) ****
_____________________________________________________________________
Upstream point/station elevation =  2240.100(Ft.)
Downstream point/station elevation =  2228.700(Ft.)
Pipe length  =   144.20(Ft.)   Manning's N = 0.013
No. of pipes = 1  Required pipe flow  =    15.192(CFS)
Nearest computed pipe diameter  =     15.00(In.)
Calculated individual pipe flow  =    15.192(CFS)
Normal flow depth in pipe =   10.50(In.)
Flow top width inside pipe =   13.75(In.)
Critical depth could not be calculated.
Pipe flow velocity =     16.57(Ft/s)
Travel time through pipe =    0.15 min.
Time of concentration (TC) =     8.62 min.
End of computations, total study area =            4.23 (Ac.)
The following figures may
be used for a unit hydrograph study of the same area.

Area averaged pervious area fraction(Ap) = 1.000
Area averaged RI index number =  76.1
```

```
              Riverside County Rational Hydrology Program

CIVILCADD/CIVILDESIGN Engineering Software,(c) 1989 - 2005 Version 7.1
       Rational Hydrology Study        Date: 11/04/20  File:AREA08.out
------------------------------------------------------------------------
BEAUMONT POINTE
PRELIMINARY HYDROLOGY STUDY
AREA 8 DEVELOPED
100-YEAR
------------------------------------------------------------------------
 *********   Hydrology Study Control Information **********

 English (in-lb) Units used in input data file

------------------------------------------------------------------------


Program License Serial Number 6094

------------------------------------------------------------------------
Rational Method Hydrology Program based on
Riverside County Flood Control & Water Conservation District
1978 hydrology manual

Storm event (year) =  100.00 Antecedent Moisture Condition = 3

2 year, 1 hour precipitation =  0.551(In.)
100 year, 1 hour precipitation =  1.560(In.)

Storm event year = 100.0
Calculated rainfall intensity data:
1 hour intensity =  1.560(In/Hr)
Slope of intensity duration curve = 0.5000




++++++++++++++++++++++++++++++++++++++++++++++++++++++++++++++++++++++
Process from Point/Station        8.000 to Point/Station        8.010
**** INITIAL AREA EVALUATION ****
______________________________________________________________________
Initial area flow distance =   684.700(Ft.)
Top (of initial area) elevation =  2367.000(Ft.)
Bottom (of initial area) elevation =  2243.400(Ft.)
Difference in elevation =   123.600(Ft.)
Slope =    0.18052  s(percent)=      18.05
TC = k(0.530)*[(length^3)/(elevation change)]^0.2
Initial area time of concentration =   10.167 min.
Rainfall intensity =      3.790(In/Hr) for a   100.0 year storm
UNDEVELOPED (poor cover) subarea
Runoff Coefficient = 0.861
Decimal fraction soil group A = 0.190
Decimal fraction soil group B = 0.810
Decimal fraction soil group C = 0.000
Decimal fraction soil group D = 0.000
RI index for soil(AMC 3)  =  88.55
Pervious area fraction =  1.000; Impervious fraction =  0.000
Initial subarea runoff =     16.915(CFS)
Total initial stream area =        5.185(Ac.)
Pervious area fraction = 1.000


++++++++++++++++++++++++++++++++++++++++++++++++++++++++++++++++++++++
Process from Point/Station        8.010 to Point/Station        8.020
```

```
**** PIPEFLOW TRAVEL TIME (Program estimated size) ****
_____________________________________________________________________
Upstream point/station elevation =  2243.400(Ft.)
Downstream point/station elevation =  2234.700(Ft.)
Pipe length  =   124.30(Ft.)   Manning's N = 0.013
No. of pipes = 1  Required pipe flow  =    16.915(CFS)
Nearest computed pipe diameter  =     15.00(In.)
Calculated individual pipe flow  =    16.915(CFS)
Normal flow depth in pipe =   12.16(In.)
Flow top width inside pipe =   11.75(In.)
Critical depth could not be calculated.
Pipe flow velocity =     15.88(Ft/s)
Travel time through pipe =    0.13 min.
Time of concentration (TC) =    10.30 min.
End of computations, total study area =            5.18 (Ac.)
The following figures may
be used for a unit hydrograph study of the same area.

Area averaged pervious area fraction(Ap) = 1.000
Area averaged RI index number =  75.9
```

```
              Riverside County Rational Hydrology Program

CIVILCADD/CIVILDESIGN Engineering Software,(c) 1989 - 2005 Version 7.1
       Rational Hydrology Study        Date: 11/04/20  File:AREA09.out
------------------------------------------------------------------------
BEAUMONT POINTE
PRELIMINARY HYDROLOGY STUDY
AREA 9 DEVELOPED
100-YEAR
------------------------------------------------------------------------
 *********   Hydrology Study Control Information **********

 English (in-lb) Units used in input data file

------------------------------------------------------------------------


Program License Serial Number 6094

------------------------------------------------------------------------
Rational Method Hydrology Program based on
Riverside County Flood Control & Water Conservation District
1978 hydrology manual

Storm event (year) =  100.00 Antecedent Moisture Condition = 3

2 year, 1 hour precipitation =  0.551(In.)
100 year, 1 hour precipitation =  1.560(In.)

Storm event year = 100.0
Calculated rainfall intensity data:
1 hour intensity =  1.560(In/Hr)
Slope of intensity duration curve = 0.5000




++++++++++++++++++++++++++++++++++++++++++++++++++++++++++++++++++++++
Process from Point/Station        9.000 to Point/Station        9.010
**** INITIAL AREA EVALUATION ****
______________________________________________________________________
Initial area flow distance =   648.700(Ft.)
Top (of initial area) elevation =  2367.200(Ft.)
Bottom (of initial area) elevation =  2241.600(Ft.)
Difference in elevation =   125.600(Ft.)
Slope =    0.19362  s(percent)=      19.36
TC = k(0.530)*[(length^3)/(elevation change)]^0.2
Initial area time of concentration =    9.811 min.
Rainfall intensity =      3.858(In/Hr) for a   100.0 year storm
UNDEVELOPED (poor cover) subarea
Runoff Coefficient = 0.848
Decimal fraction soil group A = 0.750
Decimal fraction soil group B = 0.250
Decimal fraction soil group C = 0.000
Decimal fraction soil group D = 0.000
RI index for soil(AMC 3)  =  84.85
Pervious area fraction =  1.000; Impervious fraction =  0.000
Initial subarea runoff =     31.264(CFS)
Total initial stream area =        9.560(Ac.)
Pervious area fraction = 1.000


++++++++++++++++++++++++++++++++++++++++++++++++++++++++++++++++++++++
Process from Point/Station        9.010 to Point/Station        9.020
```

```
**** PIPEFLOW TRAVEL TIME (Program estimated size) ****
_______________________________________________________________________
Upstream point/station elevation =  2241.600(Ft.)
Downstream point/station elevation =  2236.100(Ft.)
Pipe length  =   146.50(Ft.)   Manning's N = 0.013
No. of pipes = 1  Required pipe flow  =    31.264(CFS)
Nearest computed pipe diameter  =     21.00(In.)
Calculated individual pipe flow  =    31.264(CFS)
Normal flow depth in pipe =   17.58(In.)
Flow top width inside pipe =   15.51(In.)
Critical depth could not be calculated.
Pipe flow velocity =     14.54(Ft/s)
Travel time through pipe =    0.17 min.
Time of concentration (TC) =     9.98 min.
End of computations, total study area =            9.56 (Ac.)
The following figures may
be used for a unit hydrograph study of the same area.

Area averaged pervious area fraction(Ap) = 1.000
Area averaged RI index number =  69.8
```

```
              Riverside County Rational Hydrology Program

CIVILCADD/CIVILDESIGN Engineering Software,(c) 1989 - 2005 Version 7.1
       Rational Hydrology Study        Date: 11/04/20  File:AREA10.out
------------------------------------------------------------------------
BEAUMONT POINTE
PRELIMINARY HYDROLOGY STUDY
AREA 10 DEVELOPED
100-YEAR
------------------------------------------------------------------------
 *********   Hydrology Study Control Information **********

 English (in-lb) Units used in input data file

------------------------------------------------------------------------


Program License Serial Number 6094

------------------------------------------------------------------------
Rational Method Hydrology Program based on
Riverside County Flood Control & Water Conservation District
1978 hydrology manual

Storm event (year) =  100.00 Antecedent Moisture Condition = 3

2 year, 1 hour precipitation =  0.551(In.)
100 year, 1 hour precipitation =  1.560(In.)

Storm event year = 100.0
Calculated rainfall intensity data:
1 hour intensity =  1.560(In/Hr)
Slope of intensity duration curve = 0.5000




++++++++++++++++++++++++++++++++++++++++++++++++++++++++++++++++++++++
Process from Point/Station       10.000 to Point/Station       10.010
**** INITIAL AREA EVALUATION ****
______________________________________________________________________
Initial area flow distance =   233.700(Ft.)
Top (of initial area) elevation =  2340.000(Ft.)
Bottom (of initial area) elevation =  2258.500(Ft.)
Difference in elevation =    81.500(Ft.)
Slope =    0.34874  s(percent)=      34.87
TC = k(0.530)*[(length^3)/(elevation change)]^0.2
Initial area time of concentration =    5.797 min.
Rainfall intensity =      5.019(In/Hr) for a   100.0 year storm
UNDEVELOPED (poor cover) subarea
Runoff Coefficient = 0.874
Decimal fraction soil group A = 0.000
Decimal fraction soil group B = 1.000
Decimal fraction soil group C = 0.000
Decimal fraction soil group D = 0.000
RI index for soil(AMC 3)  =  89.80
Pervious area fraction =  1.000; Impervious fraction =  0.000
Initial subarea runoff =      2.083(CFS)
Total initial stream area =        0.475(Ac.)
Pervious area fraction = 1.000


++++++++++++++++++++++++++++++++++++++++++++++++++++++++++++++++++++++
Process from Point/Station       10.010 to Point/Station       10.020
```

```
**** PIPEFLOW TRAVEL TIME (Program estimated size) ****
_____________________________________________________________________
Upstream point/station elevation =  2258.500(Ft.)
Downstream point/station elevation =  2237.100(Ft.)
Pipe length  =   125.70(Ft.)   Manning's N = 0.013
No. of pipes = 1  Required pipe flow  =     2.083(CFS)
Nearest computed pipe diameter  =      6.00(In.)
Calculated individual pipe flow  =     2.083(CFS)
Normal flow depth in pipe =    4.45(In.)
Flow top width inside pipe =    5.26(In.)
Critical depth could not be calculated.
Pipe flow velocity =     13.34(Ft/s)
Travel time through pipe =    0.16 min.
Time of concentration (TC) =     5.95 min.
End of computations, total study area =            0.47 (Ac.)
The following figures may
be used for a unit hydrograph study of the same area.

Area averaged pervious area fraction(Ap) = 1.000
Area averaged RI index number =  78.0
```

```
              Riverside County Rational Hydrology Program

CIVILCADD/CIVILDESIGN Engineering Software,(c) 1989 - 2005 Version 7.1
       Rational Hydrology Study        Date: 11/05/20  File:AREA11.out
------------------------------------------------------------------------
BEAUMONT POINTE
PRELIMINARY HYDROLOGY STUDY
AREA 11 DEVELOPED
100-YEAR
------------------------------------------------------------------------
 *********   Hydrology Study Control Information **********

 English (in-lb) Units used in input data file

------------------------------------------------------------------------


Program License Serial Number 6094

------------------------------------------------------------------------
Rational Method Hydrology Program based on
Riverside County Flood Control & Water Conservation District
1978 hydrology manual

Storm event (year) =  100.00 Antecedent Moisture Condition = 3

2 year, 1 hour precipitation =  0.551(In.)
100 year, 1 hour precipitation =  1.560(In.)

Storm event year = 100.0
Calculated rainfall intensity data:
1 hour intensity =  1.560(In/Hr)
Slope of intensity duration curve = 0.5000




++++++++++++++++++++++++++++++++++++++++++++++++++++++++++++++++++++++
Process from Point/Station       11.000 to Point/Station       11.010
**** INITIAL AREA EVALUATION ****
______________________________________________________________________
Initial area flow distance =   693.100(Ft.)
Top (of initial area) elevation =  2346.600(Ft.)
Bottom (of initial area) elevation =  2255.000(Ft.)
Difference in elevation =    91.600(Ft.)
Slope =    0.13216  s(percent)=      13.22
TC = k(0.530)*[(length^3)/(elevation change)]^0.2
Initial area time of concentration =   10.874 min.
Rainfall intensity =      3.664(In/Hr) for a   100.0 year storm
UNDEVELOPED (poor cover) subarea
Runoff Coefficient = 0.859
Decimal fraction soil group A = 0.200
Decimal fraction soil group B = 0.800
Decimal fraction soil group C = 0.000
Decimal fraction soil group D = 0.000
RI index for soil(AMC 3)  =  88.48
Pervious area fraction =  1.000; Impervious fraction =  0.000
Initial subarea runoff =      8.442(CFS)
Total initial stream area =        2.681(Ac.)
Pervious area fraction = 1.000


++++++++++++++++++++++++++++++++++++++++++++++++++++++++++++++++++++++
Process from Point/Station       11.010 to Point/Station       11.020
```

```
**** NATURAL CHANNEL TIME + SUBAREA FLOW ADDITION ****
_____________________________________________________________________
Top of natural channel elevation =   2255.000(Ft.)
End of natural channel elevation =   2246.900(Ft.)
Length of natural channel  =   292.800(Ft.)
Estimated mean flow rate at midpoint of channel =     23.261(CFS)

Natural valley channel type used
L.A. County flood control district formula for channel velocity:
 Velocity(ft/s) = (7 + 8(q(English Units)^.352)(slope^0.5)
Velocity using mean channel flow =   5.19(Ft/s)

Correction to map slope used on extremely rugged channels with
drops and waterfalls (Plate D-6.2)
       Normal channel slope =  0.0277
Corrected/adjusted channel slope =  0.0277
Travel time =    0.94 min.     TC =   11.81  min.


 Adding area flow to channel
UNDEVELOPED (poor cover) subarea
Runoff Coefficient = 0.854
Decimal fraction soil group A = 0.340
Decimal fraction soil group B = 0.660
Decimal fraction soil group C = 0.000
Decimal fraction soil group D = 0.000
RI index for soil(AMC 3)  =  87.56
Pervious area fraction =  1.000; Impervious fraction =  0.000
Rainfall intensity =      3.516(In/Hr) for a   100.0 year storm
Subarea runoff =     28.258(CFS) for      9.412(Ac.)
Total runoff =     36.700(CFS)   Total area =      12.093(Ac.)


++++++++++++++++++++++++++++++++++++++++++++++++++++++++++++++++++++++
Process from Point/Station       11.020 to Point/Station       11.030
**** PIPEFLOW TRAVEL TIME (Program estimated size) ****
_____________________________________________________________________
Upstream point/station elevation =  2246.900(Ft.)
Downstream point/station elevation =  2246.300(Ft.)
Pipe length  =   159.50(Ft.)   Manning's N = 0.013
No. of pipes = 1  Required pipe flow  =    36.700(CFS)
Nearest computed pipe diameter  =     36.00(In.)
Calculated individual pipe flow  =    36.700(CFS)
Normal flow depth in pipe =   26.63(In.)
Flow top width inside pipe =   31.60(In.)
Critical Depth =   23.65(In.)
Pipe flow velocity =      6.55(Ft/s)
Travel time through pipe =    0.41 min.
Time of concentration (TC) =    12.22 min.
End of computations, total study area =           12.09 (Ac.)
The following figures may
be used for a unit hydrograph study of the same area.

Area averaged pervious area fraction(Ap) = 1.000
Area averaged RI index number =  74.6
```

```
              Riverside County Rational Hydrology Program

CIVILCADD/CIVILDESIGN Engineering Software,(c) 1989 - 2005 Version 7.1
       Rational Hydrology Study        Date: 11/05/20  File:AREA12.out
------------------------------------------------------------------------
BEAUMONT POINTE
PRELIMINARY HYDROLOGY STUDY
AREA 12 DEVELOPED
100-YEAR
------------------------------------------------------------------------
 *********   Hydrology Study Control Information **********

 English (in-lb) Units used in input data file

------------------------------------------------------------------------


Program License Serial Number 6094

------------------------------------------------------------------------
Rational Method Hydrology Program based on
Riverside County Flood Control & Water Conservation District
1978 hydrology manual

Storm event (year) =  100.00 Antecedent Moisture Condition = 3

2 year, 1 hour precipitation =  0.551(In.)
100 year, 1 hour precipitation =  1.560(In.)

Storm event year = 100.0
Calculated rainfall intensity data:
1 hour intensity =  1.560(In/Hr)
Slope of intensity duration curve = 0.5000




++++++++++++++++++++++++++++++++++++++++++++++++++++++++++++++++++++++
Process from Point/Station       12.000 to Point/Station       12.010
**** INITIAL AREA EVALUATION ****
______________________________________________________________________
Initial area flow distance =   507.300(Ft.)
Top (of initial area) elevation =  2370.400(Ft.)
Bottom (of initial area) elevation =  2269.500(Ft.)
Difference in elevation =   100.900(Ft.)
Slope =    0.19890  s(percent)=      19.89
TC = k(0.530)*[(length^3)/(elevation change)]^0.2
Initial area time of concentration =    8.844 min.
Rainfall intensity =      4.063(In/Hr) for a   100.0 year storm
UNDEVELOPED (poor cover) subarea
Runoff Coefficient = 0.859
Decimal fraction soil group A = 0.360
Decimal fraction soil group B = 0.640
Decimal fraction soil group C = 0.000
Decimal fraction soil group D = 0.000
RI index for soil(AMC 3)  =  87.42
Pervious area fraction =  1.000; Impervious fraction =  0.000
Initial subarea runoff =     10.221(CFS)
Total initial stream area =        2.927(Ac.)
Pervious area fraction = 1.000


++++++++++++++++++++++++++++++++++++++++++++++++++++++++++++++++++++++
Process from Point/Station       12.010 to Point/Station       12.020
```

```
**** PIPEFLOW TRAVEL TIME (Program estimated size) ****
_____________________________________________________________________
Upstream point/station elevation =  2269.500(Ft.)
Downstream point/station elevation =  2259.500(Ft.)
Pipe length  =   113.40(Ft.)   Manning's N = 0.013
No. of pipes = 1  Required pipe flow  =    10.221(CFS)
Nearest computed pipe diameter  =     12.00(In.)
Calculated individual pipe flow  =    10.221(CFS)
Normal flow depth in pipe =    9.49(In.)
Flow top width inside pipe =    9.76(In.)
Critical depth could not be calculated.
Pipe flow velocity =     15.35(Ft/s)
Travel time through pipe =    0.12 min.
Time of concentration (TC) =     8.97 min.
End of computations, total study area =            2.93 (Ac.)
The following figures may
be used for a unit hydrograph study of the same area.

Area averaged pervious area fraction(Ap) = 1.000
Area averaged RI index number =  74.0
```

```
              Riverside County Rational Hydrology Program

CIVILCADD/CIVILDESIGN Engineering Software,(c) 1989 - 2005 Version 7.1
       Rational Hydrology Study        Date: 11/05/20  File:AREA13.out
----------------------------------------------------------------------
BEAUMONT POINTE
PRELIMINARY HYDROLOGY STUDY
AREA 13 DEVELOPED
100-YEAR
----------------------------------------------------------------------
 *********   Hydrology Study Control Information **********

 English (in-lb) Units used in input data file

----------------------------------------------------------------------


Program License Serial Number 6094

----------------------------------------------------------------------
Rational Method Hydrology Program based on
Riverside County Flood Control & Water Conservation District
1978 hydrology manual

Storm event (year) =  100.00 Antecedent Moisture Condition = 3

2 year, 1 hour precipitation =  0.551(In.)
100 year, 1 hour precipitation =  1.560(In.)

Storm event year = 100.0
Calculated rainfall intensity data:
1 hour intensity =  1.560(In/Hr)
Slope of intensity duration curve = 0.5000




++++++++++++++++++++++++++++++++++++++++++++++++++++++++++++++++++++++
Process from Point/Station       13.000 to Point/Station       13.010
**** INITIAL AREA EVALUATION ****
______________________________________________________________________
Initial area flow distance =   227.100(Ft.)
Top (of initial area) elevation =  2356.900(Ft.)
Bottom (of initial area) elevation =  2352.900(Ft.)
Difference in elevation =     4.000(Ft.)
Slope =    0.01761  s(percent)=       1.76
TC = k(0.300)*[(length^3)/(elevation change)]^0.2
Initial area time of concentration =    5.894 min.
Rainfall intensity =      4.977(In/Hr) for a   100.0 year storm
COMMERCIAL subarea type
Runoff Coefficient = 0.893
Decimal fraction soil group A = 0.000
Decimal fraction soil group B = 1.000
Decimal fraction soil group C = 0.000
Decimal fraction soil group D = 0.000
RI index for soil(AMC 3)  =  74.80
Pervious area fraction =  0.100; Impervious fraction =  0.900
Initial subarea runoff =      1.955(CFS)
Total initial stream area =        0.440(Ac.)
Pervious area fraction = 0.100


++++++++++++++++++++++++++++++++++++++++++++++++++++++++++++++++++++++
Process from Point/Station       13.010 to Point/Station       13.020
```

```
**** STREET FLOW TRAVEL TIME + SUBAREA FLOW ADDITION ****
_____________________________________________________________________
Top of street segment elevation =  2352.900(Ft.)
End of street segment elevation =  2345.100(Ft.)
Length of street segment  =   816.600(Ft.)
Height of curb above gutter flowline  =    6.0(In.)
Width of half street (curb to crown)  =  20.000(Ft.)
Distance from crown to crossfall grade break  =  18.000(Ft.)
Slope from gutter to grade break (v/hz) =   0.065
Slope from grade break to crown (v/hz)  =   0.020
Street flow is on [1] side(s) of the street
Distance from curb to property line  =   2.000(Ft.)
Slope from curb to property line (v/hz) =   0.020
Gutter width =   2.000(Ft.)
Gutter hike from flowline =  2.000(In.)
 Manning's N in gutter =  0.0150
 Manning's N from gutter to grade break =  0.0150
 Manning's N from grade break to crown =  0.0150
Estimated mean flow rate at midpoint of street =      5.182(CFS)
Depth of flow =   0.399(Ft.), Average velocity =   2.623(Ft/s)
Streetflow hydraulics at midpoint of street travel:
Halfstreet flow width =  13.596(Ft.)
Flow velocity =   2.62(Ft/s)
Travel time =    5.19 min.     TC =   11.08  min.
 Adding area flow to street
COMMERCIAL subarea type
Runoff Coefficient = 0.885
Decimal fraction soil group A = 0.460
Decimal fraction soil group B = 0.540
Decimal fraction soil group C = 0.000
Decimal fraction soil group D = 0.000
RI index for soil(AMC 3)  =  64.96
Pervious area fraction =  0.100; Impervious fraction =  0.900
Rainfall intensity =      3.630(In/Hr) for a   100.0 year storm
Subarea runoff =      6.368(CFS) for      1.982(Ac.)
Total runoff =      8.322(CFS)   Total area =       2.422(Ac.)
Street flow at end of street =      8.322(CFS)
Half street flow at end of street =      8.322(CFS)
Depth of flow =   0.456(Ft.), Average velocity =   2.941(Ft/s)
Flow width (from curb towards crown)=  16.442(Ft.)


++++++++++++++++++++++++++++++++++++++++++++++++++++++++++++++++++++++
Process from Point/Station       13.020 to Point/Station       13.030
**** PIPEFLOW TRAVEL TIME (Program estimated size) ****
_____________________________________________________________________
Upstream point/station elevation =  2340.300(Ft.)
Downstream point/station elevation =  2339.400(Ft.)
Pipe length  =    93.60(Ft.)   Manning's N = 0.013
No. of pipes = 1  Required pipe flow  =     8.322(CFS)
Nearest computed pipe diameter  =     18.00(In.)
Calculated individual pipe flow  =     8.322(CFS)
Normal flow depth in pipe =   12.27(In.)
Flow top width inside pipe =   16.77(In.)
Critical Depth =   13.40(In.)
Pipe flow velocity =      6.49(Ft/s)
Travel time through pipe =    0.24 min.
Time of concentration (TC) =    11.32 min.


++++++++++++++++++++++++++++++++++++++++++++++++++++++++++++++++++++++
Process from Point/Station       13.020 to Point/Station       13.030
**** SUBAREA FLOW ADDITION ****
_____________________________________________________________________
COMMERCIAL subarea type
Runoff Coefficient = 0.884
```

```
Decimal fraction soil group A = 0.530
Decimal fraction soil group B = 0.470
Decimal fraction soil group C = 0.000
Decimal fraction soil group D = 0.000
RI index for soil(AMC 3)  =  63.28
Pervious area fraction =  0.100; Impervious fraction =  0.900
Time of concentration =    11.32 min.
Rainfall intensity =      3.591(In/Hr) for a   100.0 year storm
Subarea runoff =      2.210(CFS) for      0.696(Ac.)
Total runoff =     10.532(CFS)   Total area =       3.118(Ac.)


++++++++++++++++++++++++++++++++++++++++++++++++++++++++++++++++++++++
Process from Point/Station       13.030 to Point/Station       13.040
**** PIPEFLOW TRAVEL TIME (Program estimated size) ****
______________________________________________________________________
Upstream point/station elevation =  2339.400(Ft.)
Downstream point/station elevation =  2337.500(Ft.)
Pipe length  =   193.90(Ft.)   Manning's N = 0.013
No. of pipes = 1  Required pipe flow  =    10.532(CFS)
Nearest computed pipe diameter  =     18.00(In.)
Calculated individual pipe flow  =    10.532(CFS)
Normal flow depth in pipe =   14.98(In.)
Flow top width inside pipe =   13.46(In.)
Critical Depth =   14.96(In.)
Pipe flow velocity =      6.70(Ft/s)
Travel time through pipe =    0.48 min.
Time of concentration (TC) =    11.80 min.


++++++++++++++++++++++++++++++++++++++++++++++++++++++++++++++++++++++
Process from Point/Station       13.040 to Point/Station       13.040
**** SUBAREA FLOW ADDITION ****
______________________________________________________________________
COMMERCIAL subarea type
Runoff Coefficient = 0.886
Decimal fraction soil group A = 0.370
Decimal fraction soil group B = 0.630
Decimal fraction soil group C = 0.000
Decimal fraction soil group D = 0.000
RI index for soil(AMC 3)  =  67.12
Pervious area fraction =  0.100; Impervious fraction =  0.900
Time of concentration =    11.80 min.
Rainfall intensity =      3.517(In/Hr) for a   100.0 year storm
Subarea runoff =     29.656(CFS) for      9.518(Ac.)
Total runoff =     40.188(CFS)   Total area =      12.636(Ac.)


++++++++++++++++++++++++++++++++++++++++++++++++++++++++++++++++++++++
Process from Point/Station       13.040 to Point/Station       13.050
**** PIPEFLOW TRAVEL TIME (Program estimated size) ****
______________________________________________________________________
Upstream point/station elevation =  2337.500(Ft.)
Downstream point/station elevation =  2335.000(Ft.)
Pipe length  =   248.80(Ft.)   Manning's N = 0.013
No. of pipes = 1  Required pipe flow  =    40.188(CFS)
Nearest computed pipe diameter  =     30.00(In.)
Calculated individual pipe flow  =    40.188(CFS)
Normal flow depth in pipe =   24.00(In.)
Flow top width inside pipe =   24.00(In.)
Critical Depth =   25.59(In.)
Pipe flow velocity =      9.55(Ft/s)
Travel time through pipe =    0.43 min.
Time of concentration (TC) =    12.24 min.
```

```
++++++++++++++++++++++++++++++++++++++++++++++++++++++++++++++++++++++
Process from Point/Station       13.050 to Point/Station       13.050
**** SUBAREA FLOW ADDITION ****
______________________________________________________________________
UNDEVELOPED (good cover) subarea
Runoff Coefficient = 0.791
Decimal fraction soil group A = 0.340
Decimal fraction soil group B = 0.580
Decimal fraction soil group C = 0.000
Decimal fraction soil group D = 0.080
RI index for soil(AMC 3)  =  73.76
Pervious area fraction =  1.000; Impervious fraction =  0.000
Time of concentration =    12.24 min.
Rainfall intensity =      3.454(In/Hr) for a   100.0 year storm
Subarea runoff =     14.246(CFS) for      5.212(Ac.)
Total runoff =     54.433(CFS)   Total area =      17.848(Ac.)


++++++++++++++++++++++++++++++++++++++++++++++++++++++++++++++++++++++
Process from Point/Station       13.050 to Point/Station       13.050
**** CONFLUENCE OF MAIN STREAMS ****
______________________________________________________________________
The following data inside Main Stream is listed:
In Main Stream number: 1
Stream flow area =     17.848(Ac.)
Runoff from this stream =     54.433(CFS)
Time of concentration =   12.24 min.
Rainfall intensity =     3.454(In/Hr)
Program is now starting with Main Stream No. 2


++++++++++++++++++++++++++++++++++++++++++++++++++++++++++++++++++++++
Process from Point/Station       13.060 to Point/Station       13.070
**** INITIAL AREA EVALUATION ****
______________________________________________________________________
Initial area flow distance =   781.400(Ft.)
Top (of initial area) elevation =  2356.600(Ft.)
Bottom (of initial area) elevation =  2347.700(Ft.)
Difference in elevation =     8.900(Ft.)
Slope =    0.01139  s(percent)=       1.14
TC = k(0.300)*[(length^3)/(elevation change)]^0.2
Initial area time of concentration =   10.543 min.
Rainfall intensity =      3.721(In/Hr) for a   100.0 year storm
COMMERCIAL subarea type
Runoff Coefficient = 0.890
Decimal fraction soil group A = 0.180
Decimal fraction soil group B = 0.590
Decimal fraction soil group C = 0.230
Decimal fraction soil group D = 0.000
RI index for soil(AMC 3)  =  73.74
Pervious area fraction =  0.100; Impervious fraction =  0.900
Initial subarea runoff =      9.845(CFS)
Total initial stream area =        2.973(Ac.)
Pervious area fraction = 0.100


++++++++++++++++++++++++++++++++++++++++++++++++++++++++++++++++++++++
Process from Point/Station       13.070 to Point/Station       13.080
**** PIPEFLOW TRAVEL TIME (Program estimated size) ****
______________________________________________________________________
Upstream point/station elevation =  2343.300(Ft.)
Downstream point/station elevation =  2339.200(Ft.)
Pipe length  =   816.70(Ft.)   Manning's N = 0.013
No. of pipes = 1  Required pipe flow  =     9.845(CFS)
Nearest computed pipe diameter  =     21.00(In.)
Calculated individual pipe flow  =     9.845(CFS)
```

```
Normal flow depth in pipe =   15.23(In.)
Flow top width inside pipe =   18.74(In.)
Critical Depth =   14.03(In.)
Pipe flow velocity =      5.26(Ft/s)
Travel time through pipe =    2.59 min.
Time of concentration (TC) =    13.13 min.


++++++++++++++++++++++++++++++++++++++++++++++++++++++++++++++++++++++
Process from Point/Station       13.080 to Point/Station       13.080
**** SUBAREA FLOW ADDITION ****
______________________________________________________________________
COMMERCIAL subarea type
Runoff Coefficient = 0.889
Decimal fraction soil group A = 0.140
Decimal fraction soil group B = 0.720
Decimal fraction soil group C = 0.140
Decimal fraction soil group D = 0.000
RI index for soil(AMC 3)  =  73.57
Pervious area fraction =  0.100; Impervious fraction =  0.900
Time of concentration =    13.13 min.
Rainfall intensity =      3.335(In/Hr) for a   100.0 year storm
Subarea runoff =     54.630(CFS) for     18.433(Ac.)
Total runoff =     64.475(CFS)   Total area =      21.406(Ac.)


++++++++++++++++++++++++++++++++++++++++++++++++++++++++++++++++++++++
Process from Point/Station       13.080 to Point/Station       13.090
**** PIPEFLOW TRAVEL TIME (Program estimated size) ****
______________________________________________________________________
Upstream point/station elevation =  2339.200(Ft.)
Downstream point/station elevation =  2336.700(Ft.)
Pipe length  =   497.90(Ft.)   Manning's N = 0.013
No. of pipes = 1  Required pipe flow  =    64.475(CFS)
Nearest computed pipe diameter  =     42.00(In.)
Calculated individual pipe flow  =    64.475(CFS)
Normal flow depth in pipe =   31.27(In.)
Flow top width inside pipe =   36.64(In.)
Critical Depth =   30.22(In.)
Pipe flow velocity =      8.39(Ft/s)
Travel time through pipe =    0.99 min.
Time of concentration (TC) =    14.12 min.


++++++++++++++++++++++++++++++++++++++++++++++++++++++++++++++++++++++
Process from Point/Station       13.080 to Point/Station       13.090
**** CONFLUENCE OF MINOR STREAMS ****
______________________________________________________________________
Along Main Stream number: 2 in normal stream number 1
Stream flow area =     21.406(Ac.)
Runoff from this stream =     64.475(CFS)
Time of concentration =   14.12 min.
Rainfall intensity =     3.216(In/Hr)


++++++++++++++++++++++++++++++++++++++++++++++++++++++++++++++++++++++
Process from Point/Station       13.100 to Point/Station       13.110
**** INITIAL AREA EVALUATION ****
______________________________________________________________________
Initial area flow distance =   483.400(Ft.)
Top (of initial area) elevation =  2357.800(Ft.)
Bottom (of initial area) elevation =  2348.100(Ft.)
Difference in elevation =     9.700(Ft.)
Slope =    0.02007  s(percent)=       2.01
TC = k(0.300)*[(length^3)/(elevation change)]^0.2
Initial area time of concentration =    7.769 min.
```

```
Rainfall intensity =      4.335(In/Hr) for a   100.0 year storm
COMMERCIAL subarea type
Runoff Coefficient = 0.892
Decimal fraction soil group A = 0.000
Decimal fraction soil group B = 1.000
Decimal fraction soil group C = 0.000
Decimal fraction soil group D = 0.000
RI index for soil(AMC 3)  =  74.80
Pervious area fraction =  0.100; Impervious fraction =  0.900
Initial subarea runoff =      0.904(CFS)
Total initial stream area =        0.234(Ac.)
Pervious area fraction = 0.100


++++++++++++++++++++++++++++++++++++++++++++++++++++++++++++++++++++++
Process from Point/Station       13.110 to Point/Station       13.120
**** STREET FLOW TRAVEL TIME + SUBAREA FLOW ADDITION ****
______________________________________________________________________
Top of street segment elevation =  2348.100(Ft.)
End of street segment elevation =  2342.600(Ft.)
Length of street segment  =  1106.600(Ft.)
Height of curb above gutter flowline  =    6.0(In.)
Width of half street (curb to crown)  =  20.000(Ft.)
Distance from crown to crossfall grade break  =  18.000(Ft.)
Slope from gutter to grade break (v/hz) =   0.065
Slope from grade break to crown (v/hz)  =   0.020
Street flow is on [1] side(s) of the street
Distance from curb to property line  =   2.000(Ft.)
Slope from curb to property line (v/hz) =   0.020
Gutter width =   2.000(Ft.)
Gutter hike from flowline =  2.000(In.)
 Manning's N in gutter =  0.0150
 Manning's N from gutter to grade break =  0.0150
 Manning's N from grade break to crown =  0.0150
Estimated mean flow rate at midpoint of street =      3.512(CFS)
Depth of flow =   0.392(Ft.), Average velocity =   1.864(Ft/s)
Streetflow hydraulics at midpoint of street travel:
Halfstreet flow width =  13.255(Ft.)
Flow velocity =   1.86(Ft/s)
Travel time =    9.89 min.     TC =   17.66  min.
 Adding area flow to street
COMMERCIAL subarea type
Runoff Coefficient = 0.879
Decimal fraction soil group A = 0.650
Decimal fraction soil group B = 0.350
Decimal fraction soil group C = 0.000
Decimal fraction soil group D = 0.000
RI index for soil(AMC 3)  =  60.40
Pervious area fraction =  0.100; Impervious fraction =  0.900
Rainfall intensity =      2.875(In/Hr) for a   100.0 year storm
Subarea runoff =      5.161(CFS) for      2.042(Ac.)
Total runoff =      6.066(CFS)   Total area =       2.276(Ac.)
Street flow at end of street =      6.066(CFS)
Half street flow at end of street =      6.066(CFS)
Depth of flow =   0.457(Ft.), Average velocity =   2.127(Ft/s)
Flow width (from curb towards crown)=  16.509(Ft.)


++++++++++++++++++++++++++++++++++++++++++++++++++++++++++++++++++++++
Process from Point/Station       13.120 to Point/Station       13.130
**** PIPEFLOW TRAVEL TIME (Program estimated size) ****
______________________________________________________________________
Upstream point/station elevation =  2339.000(Ft.)
Downstream point/station elevation =  2338.800(Ft.)
Pipe length  =    41.30(Ft.)   Manning's N = 0.013
No. of pipes = 1  Required pipe flow  =     6.066(CFS)
```

```
Nearest computed pipe diameter  =     18.00(In.)
Calculated individual pipe flow  =     6.066(CFS)
Normal flow depth in pipe =   12.52(In.)
Flow top width inside pipe =   16.57(In.)
Critical Depth =   11.42(In.)
Pipe flow velocity =      4.63(Ft/s)
Travel time through pipe =    0.15 min.
Time of concentration (TC) =    17.81 min.


++++++++++++++++++++++++++++++++++++++++++++++++++++++++++++++++++++++
Process from Point/Station       13.130 to Point/Station       13.130
**** SUBAREA FLOW ADDITION ****
______________________________________________________________________
COMMERCIAL subarea type
Runoff Coefficient = 0.882
Decimal fraction soil group A = 0.460
Decimal fraction soil group B = 0.540
Decimal fraction soil group C = 0.000
Decimal fraction soil group D = 0.000
RI index for soil(AMC 3)  =  64.96
Pervious area fraction =  0.100; Impervious fraction =  0.900
Time of concentration =    17.81 min.
Rainfall intensity =      2.863(In/Hr) for a   100.0 year storm
Subarea runoff =      2.003(CFS) for      0.793(Ac.)
Total runoff =      8.068(CFS)   Total area =       3.069(Ac.)


++++++++++++++++++++++++++++++++++++++++++++++++++++++++++++++++++++++
Process from Point/Station       13.130 to Point/Station       13.090
**** PIPEFLOW TRAVEL TIME (Program estimated size) ****
______________________________________________________________________
Upstream point/station elevation =  2338.800(Ft.)
Downstream point/station elevation =  2336.700(Ft.)
Pipe length  =   422.10(Ft.)   Manning's N = 0.013
No. of pipes = 1  Required pipe flow  =     8.068(CFS)
Nearest computed pipe diameter  =     21.00(In.)
Calculated individual pipe flow  =     8.068(CFS)
Normal flow depth in pipe =   13.22(In.)
Flow top width inside pipe =   20.28(In.)
Critical Depth =   12.65(In.)
Pipe flow velocity =      5.06(Ft/s)
Travel time through pipe =    1.39 min.
Time of concentration (TC) =    19.20 min.


++++++++++++++++++++++++++++++++++++++++++++++++++++++++++++++++++++++
Process from Point/Station       13.130 to Point/Station       13.090
**** CONFLUENCE OF MINOR STREAMS ****
______________________________________________________________________
Along Main Stream number: 2 in normal stream number 2
Stream flow area =      3.069(Ac.)
Runoff from this stream =      8.068(CFS)
Time of concentration =   19.20 min.
Rainfall intensity =     2.758(In/Hr)


++++++++++++++++++++++++++++++++++++++++++++++++++++++++++++++++++++++
Process from Point/Station       13.140 to Point/Station       13.150
**** INITIAL AREA EVALUATION ****
______________________________________________________________________
Initial area flow distance =   322.500(Ft.)
Top (of initial area) elevation =  2346.600(Ft.)
Bottom (of initial area) elevation =  2342.400(Ft.)
Difference in elevation =     4.200(Ft.)
Slope =    0.01302  s(percent)=       1.30
```

```
TC = k(0.300)*[(length^3)/(elevation change)]^0.2
Initial area time of concentration =    7.204 min.
Rainfall intensity =      4.502(In/Hr) for a   100.0 year storm
COMMERCIAL subarea type
Runoff Coefficient = 0.883
Decimal fraction soil group A = 0.840
Decimal fraction soil group B = 0.160
Decimal fraction soil group C = 0.000
Decimal fraction soil group D = 0.000
RI index for soil(AMC 3)  =  55.84
Pervious area fraction =  0.100; Impervious fraction =  0.900
Initial subarea runoff =      5.760(CFS)
Total initial stream area =        1.449(Ac.)
Pervious area fraction = 0.100


++++++++++++++++++++++++++++++++++++++++++++++++++++++++++++++++++++++
Process from Point/Station       13.150 to Point/Station       13.090
**** PIPEFLOW TRAVEL TIME (Program estimated size) ****
______________________________________________________________________
Upstream point/station elevation =  2337.100(Ft.)
Downstream point/station elevation =  2336.700(Ft.)
Pipe length  =    37.90(Ft.)   Manning's N = 0.013
No. of pipes = 1  Required pipe flow  =     5.760(CFS)
Nearest computed pipe diameter  =     15.00(In.)
Calculated individual pipe flow  =     5.760(CFS)
Normal flow depth in pipe =   10.80(In.)
Flow top width inside pipe =   13.47(In.)
Critical Depth =   11.66(In.)
Pipe flow velocity =      6.09(Ft/s)
Travel time through pipe =    0.10 min.
Time of concentration (TC) =     7.31 min.


++++++++++++++++++++++++++++++++++++++++++++++++++++++++++++++++++++++
Process from Point/Station       13.150 to Point/Station       13.090
**** CONFLUENCE OF MINOR STREAMS ****
______________________________________________________________________
Along Main Stream number: 2 in normal stream number 3
Stream flow area =      1.449(Ac.)
Runoff from this stream =      5.760(CFS)
Time of concentration =    7.31 min.
Rainfall intensity =     4.470(In/Hr)
Summary of stream data:

Stream   Flow rate      TC            Rainfall Intensity
 No.       (CFS)       (min)                 (In/Hr)


1       64.475     14.12                 3.216
2        8.068     19.20                 2.758
3        5.760      7.31                 4.470
Largest stream flow has longer or shorter time of concentration
Qp =     64.475 + sum of
         Qa          Tb/Ta
          8.068 *    0.735 =      5.933
         Qb         Ia/Ib
          5.760 *    0.719 =      4.144
Qp =     74.551

Total of 3 streams to confluence:
Flow rates before confluence point:
      64.475       8.068       5.760
Area of streams before confluence:
       21.406        3.069        1.449
Results of confluence:
```

```
Total flow rate =     74.551(CFS)
Time of concentration =    14.118 min.
Effective stream area after confluence =     25.924(Ac.)


++++++++++++++++++++++++++++++++++++++++++++++++++++++++++++++++++++++
Process from Point/Station       13.090 to Point/Station       13.050
**** PIPEFLOW TRAVEL TIME (Program estimated size) ****
______________________________________________________________________
Upstream point/station elevation =  2336.700(Ft.)
Downstream point/station elevation =  2335.000(Ft.)
Pipe length  =   341.30(Ft.)   Manning's N = 0.013
No. of pipes = 1  Required pipe flow  =    74.551(CFS)
Nearest computed pipe diameter  =     42.00(In.)
Calculated individual pipe flow  =    74.551(CFS)
Normal flow depth in pipe =   36.75(In.)
Flow top width inside pipe =   27.78(In.)
Critical Depth =   32.45(In.)
Pipe flow velocity =      8.36(Ft/s)
Travel time through pipe =    0.68 min.
Time of concentration (TC) =    14.80 min.


++++++++++++++++++++++++++++++++++++++++++++++++++++++++++++++++++++++
Process from Point/Station       13.090 to Point/Station       13.090
**** SUBAREA FLOW ADDITION ****
______________________________________________________________________
COMMERCIAL subarea type
Runoff Coefficient = 0.885
Decimal fraction soil group A = 0.350
Decimal fraction soil group B = 0.650
Decimal fraction soil group C = 0.000
Decimal fraction soil group D = 0.000
RI index for soil(AMC 3)  =  67.60
Pervious area fraction =  0.100; Impervious fraction =  0.900
Time of concentration =    14.80 min.
Rainfall intensity =      3.141(In/Hr) for a   100.0 year storm
Subarea runoff =      1.912(CFS) for      0.688(Ac.)
Total runoff =     76.463(CFS)   Total area =      26.612(Ac.)


++++++++++++++++++++++++++++++++++++++++++++++++++++++++++++++++++++++
Process from Point/Station       13.090 to Point/Station       13.050
**** CONFLUENCE OF MAIN STREAMS ****
______________________________________________________________________
The following data inside Main Stream is listed:
In Main Stream number: 2
Stream flow area =     26.612(Ac.)
Runoff from this stream =     76.463(CFS)
Time of concentration =   14.80 min.
Rainfall intensity =     3.141(In/Hr)
Program is now starting with Main Stream No. 3


++++++++++++++++++++++++++++++++++++++++++++++++++++++++++++++++++++++
Process from Point/Station       13.160 to Point/Station       13.170
**** INITIAL AREA EVALUATION ****
______________________________________________________________________
Initial area flow distance =   337.000(Ft.)
Top (of initial area) elevation =  2445.000(Ft.)
Bottom (of initial area) elevation =  2359.000(Ft.)
Difference in elevation =    86.000(Ft.)
Slope =    0.25519  s(percent)=      25.52
TC = k(0.940)*[(length^3)/(elevation change)]^0.2
Initial area time of concentration =   12.671 min.
Rainfall intensity =      3.395(In/Hr) for a   100.0 year storm
```

```
UNDEVELOPED (good cover) subarea
Runoff Coefficient = 0.866
Decimal fraction soil group A = 0.000
Decimal fraction soil group B = 0.000
Decimal fraction soil group C = 0.000
Decimal fraction soil group D = 1.000
RI index for soil(AMC 3)  =  91.00
Pervious area fraction =  1.000; Impervious fraction =  0.000
Initial subarea runoff =      3.000(CFS)
Total initial stream area =        1.020(Ac.)
Pervious area fraction = 1.000


++++++++++++++++++++++++++++++++++++++++++++++++++++++++++++++++++++++
Process from Point/Station       13.170 to Point/Station       13.180
**** STREET FLOW TRAVEL TIME + SUBAREA FLOW ADDITION ****
______________________________________________________________________
Top of street segment elevation =  2359.000(Ft.)
End of street segment elevation =  2351.800(Ft.)
Length of street segment  =   864.900(Ft.)
Height of curb above gutter flowline  =    6.0(In.)
Width of half street (curb to crown)  =  28.000(Ft.)
Distance from crown to crossfall grade break  =  26.000(Ft.)
Slope from gutter to grade break (v/hz) =   0.065
Slope from grade break to crown (v/hz)  =   0.020
Street flow is on [1] side(s) of the street
Distance from curb to property line  =  13.000(Ft.)
Slope from curb to property line (v/hz) =   0.020
Gutter width =   2.000(Ft.)
Gutter hike from flowline =  2.000(In.)
 Manning's N in gutter =  0.0150
 Manning's N from gutter to grade break =  0.0150
 Manning's N from grade break to crown =  0.0150
Estimated mean flow rate at midpoint of street =      7.582(CFS)
Depth of flow =   0.452(Ft.), Average velocity =   2.729(Ft/s)
Streetflow hydraulics at midpoint of street travel:
Halfstreet flow width =  16.284(Ft.)
Flow velocity =   2.73(Ft/s)
Travel time =    5.28 min.     TC =   17.95  min.
 Adding area flow to street
SINGLE FAMILY (1/4 Acre Lot)
Runoff Coefficient = 0.869
Decimal fraction soil group A = 0.000
Decimal fraction soil group B = 0.130
Decimal fraction soil group C = 0.000
Decimal fraction soil group D = 0.870
RI index for soil(AMC 3)  =  86.52
Pervious area fraction =  0.500; Impervious fraction =  0.500
Rainfall intensity =      2.852(In/Hr) for a   100.0 year storm
Subarea runoff =      9.107(CFS) for      3.673(Ac.)
Total runoff =     12.107(CFS)   Total area =       4.693(Ac.)
Street flow at end of street =     12.107(CFS)
Half street flow at end of street =     12.107(CFS)
Depth of flow =   0.523(Ft.), Average velocity =   2.980(Ft/s)
Warning: depth of flow exceeds top of curb
Distance that curb overflow reaches into property =    1.14(Ft.)
Flow width (from curb towards crown)=  19.806(Ft.)


++++++++++++++++++++++++++++++++++++++++++++++++++++++++++++++++++++++
Process from Point/Station       13.180 to Point/Station       13.190
**** PIPEFLOW TRAVEL TIME (Program estimated size) ****
______________________________________________________________________
Upstream point/station elevation =  2345.800(Ft.)
Downstream point/station elevation =  2337.000(Ft.)
Pipe length  =   132.20(Ft.)   Manning's N = 0.013
```

```
No. of pipes = 1  Required pipe flow  =    12.107(CFS)
Nearest computed pipe diameter  =     15.00(In.)
Calculated individual pipe flow  =    12.107(CFS)
Normal flow depth in pipe =    9.48(In.)
Flow top width inside pipe =   14.47(In.)
Critical depth could not be calculated.
Pipe flow velocity =     14.81(Ft/s)
Travel time through pipe =    0.15 min.
Time of concentration (TC) =    18.10 min.


++++++++++++++++++++++++++++++++++++++++++++++++++++++++++++++++++++++
Process from Point/Station       13.190 to Point/Station       13.190
**** SUBAREA FLOW ADDITION ****
______________________________________________________________________
COMMERCIAL subarea type
Runoff Coefficient = 0.890
Decimal fraction soil group A = 0.000
Decimal fraction soil group B = 0.690
Decimal fraction soil group C = 0.000
Decimal fraction soil group D = 0.310
RI index for soil(AMC 3)  =  79.51
Pervious area fraction =  0.100; Impervious fraction =  0.900
Time of concentration =    18.10 min.
Rainfall intensity =      2.840(In/Hr) for a   100.0 year storm
Subarea runoff =      3.869(CFS) for      1.530(Ac.)
Total runoff =     15.976(CFS)   Total area =       6.223(Ac.)


++++++++++++++++++++++++++++++++++++++++++++++++++++++++++++++++++++++
Process from Point/Station       13.190 to Point/Station       13.200
**** PIPEFLOW TRAVEL TIME (Program estimated size) ****
______________________________________________________________________
Upstream point/station elevation =  2337.000(Ft.)
Downstream point/station elevation =  2335.300(Ft.)
Pipe length  =   168.00(Ft.)   Manning's N = 0.013
No. of pipes = 1  Required pipe flow  =    15.976(CFS)
Nearest computed pipe diameter  =     21.00(In.)
Calculated individual pipe flow  =    15.976(CFS)
Normal flow depth in pipe =   17.25(In.)
Flow top width inside pipe =   16.09(In.)
Critical Depth =   17.70(In.)
Pipe flow velocity =      7.55(Ft/s)
Travel time through pipe =    0.37 min.
Time of concentration (TC) =    18.47 min.


++++++++++++++++++++++++++++++++++++++++++++++++++++++++++++++++++++++
Process from Point/Station       13.200 to Point/Station       13.200
**** SUBAREA FLOW ADDITION ****
______________________________________________________________________
COMMERCIAL subarea type
Runoff Coefficient = 0.886
Decimal fraction soil group A = 0.240
Decimal fraction soil group B = 0.660
Decimal fraction soil group C = 0.000
Decimal fraction soil group D = 0.100
RI index for soil(AMC 3)  =  71.71
Pervious area fraction =  0.100; Impervious fraction =  0.900
Time of concentration =    18.47 min.
Rainfall intensity =      2.812(In/Hr) for a   100.0 year storm
Subarea runoff =     23.797(CFS) for      9.555(Ac.)
Total runoff =     39.772(CFS)   Total area =      15.778(Ac.)


++++++++++++++++++++++++++++++++++++++++++++++++++++++++++++++++++++++
```

```
Process from Point/Station       13.200 to Point/Station       13.050
**** PIPEFLOW TRAVEL TIME (Program estimated size) ****
______________________________________________________________________
Upstream point/station elevation =  2335.300(Ft.)
Downstream point/station elevation =  2335.000(Ft.)
Pipe length  =    33.10(Ft.)   Manning's N = 0.013
No. of pipes = 1  Required pipe flow  =    39.772(CFS)
Nearest computed pipe diameter  =     30.00(In.)
Calculated individual pipe flow  =    39.772(CFS)
Normal flow depth in pipe =   25.13(In.)
Flow top width inside pipe =   22.13(In.)
Critical Depth =   25.48(In.)
Pipe flow velocity =      9.06(Ft/s)
Travel time through pipe =    0.06 min.
Time of concentration (TC) =    18.53 min.


++++++++++++++++++++++++++++++++++++++++++++++++++++++++++++++++++++++
Process from Point/Station       13.200 to Point/Station       13.050
**** CONFLUENCE OF MAIN STREAMS ****
______________________________________________________________________
The following data inside Main Stream is listed:
In Main Stream number: 3
Stream flow area =     15.778(Ac.)
Runoff from this stream =     39.772(CFS)
Time of concentration =   18.53 min.
Rainfall intensity =     2.807(In/Hr)
Program is now starting with Main Stream No. 4


++++++++++++++++++++++++++++++++++++++++++++++++++++++++++++++++++++++
Process from Point/Station       13.210 to Point/Station       13.220
**** INITIAL AREA EVALUATION ****
______________________________________________________________________
Initial area flow distance =   268.800(Ft.)
Top (of initial area) elevation =  2356.600(Ft.)
Bottom (of initial area) elevation =  2346.200(Ft.)
Difference in elevation =    10.400(Ft.)
Slope =    0.03869  s(percent)=       3.87
TC = k(0.390)*[(length^3)/(elevation change)]^0.2
Initial area time of concentration =    7.004 min.
Rainfall intensity =      4.566(In/Hr) for a   100.0 year storm
SINGLE FAMILY (1/4 Acre Lot)
Runoff Coefficient = 0.883
Decimal fraction soil group A = 0.000
Decimal fraction soil group B = 0.000
Decimal fraction soil group C = 0.000
Decimal fraction soil group D = 1.000
RI index for soil(AMC 3)  =  88.00
Pervious area fraction =  0.500; Impervious fraction =  0.500
Initial subarea runoff =      1.733(CFS)
Total initial stream area =        0.430(Ac.)
Pervious area fraction = 0.500


++++++++++++++++++++++++++++++++++++++++++++++++++++++++++++++++++++++
Process from Point/Station       13.220 to Point/Station       13.230
**** STREET FLOW TRAVEL TIME + SUBAREA FLOW ADDITION ****
______________________________________________________________________
Top of street segment elevation =  2346.200(Ft.)
End of street segment elevation =  2341.900(Ft.)
Length of street segment  =   850.300(Ft.)
Height of curb above gutter flowline  =    6.0(In.)
Width of half street (curb to crown)  =  28.000(Ft.)
Distance from crown to crossfall grade break  =  26.000(Ft.)
Slope from gutter to grade break (v/hz) =   0.065
```

```
Slope from grade break to crown (v/hz)  =   0.020
Street flow is on [1] side(s) of the street
Distance from curb to property line  =  13.000(Ft.)
Slope from curb to property line (v/hz) =   0.020
Gutter width =   2.000(Ft.)
Gutter hike from flowline =  2.000(In.)
 Manning's N in gutter =  0.0150
 Manning's N from gutter to grade break =  0.0150
 Manning's N from grade break to crown =  0.0150
Estimated mean flow rate at midpoint of street =      7.127(CFS)
Depth of flow =   0.477(Ft.), Average velocity =   2.226(Ft/s)
Streetflow hydraulics at midpoint of street travel:
Halfstreet flow width =  17.535(Ft.)
Flow velocity =   2.23(Ft/s)
Travel time =    6.37 min.     TC =   13.37  min.
 Adding area flow to street
SINGLE FAMILY (1/4 Acre Lot)
Runoff Coefficient = 0.859
Decimal fraction soil group A = 0.040
Decimal fraction soil group B = 0.570
Decimal fraction soil group C = 0.000
Decimal fraction soil group D = 0.390
RI index for soil(AMC 3)  =  79.96
Pervious area fraction =  0.500; Impervious fraction =  0.500
Rainfall intensity =      3.305(In/Hr) for a   100.0 year storm
Subarea runoff =     10.701(CFS) for      3.771(Ac.)
Total runoff =     12.434(CFS)   Total area =       4.201(Ac.)
Street flow at end of street =     12.434(CFS)
Half street flow at end of street =     12.434(CFS)
Depth of flow =   0.572(Ft.), Average velocity =   2.390(Ft/s)
Warning: depth of flow exceeds top of curb
Distance that curb overflow reaches into property =    3.58(Ft.)
Flow width (from curb towards crown)=  22.245(Ft.)


++++++++++++++++++++++++++++++++++++++++++++++++++++++++++++++++++++++
Process from Point/Station       13.230 to Point/Station       13.240
**** PIPEFLOW TRAVEL TIME (Program estimated size) ****
______________________________________________________________________
Upstream point/station elevation =  2339.100(Ft.)
Downstream point/station elevation =  2338.900(Ft.)
Pipe length  =    45.10(Ft.)   Manning's N = 0.013
No. of pipes = 1  Required pipe flow  =    12.434(CFS)
Nearest computed pipe diameter  =     24.00(In.)
Calculated individual pipe flow  =    12.434(CFS)
Normal flow depth in pipe =   16.62(In.)
Flow top width inside pipe =   22.15(In.)
Critical Depth =   15.21(In.)
Pipe flow velocity =      5.36(Ft/s)
Travel time through pipe =    0.14 min.
Time of concentration (TC) =    13.51 min.


++++++++++++++++++++++++++++++++++++++++++++++++++++++++++++++++++++++
Process from Point/Station       13.240 to Point/Station       13.240
**** SUBAREA FLOW ADDITION ****
______________________________________________________________________
COMMERCIAL subarea type
Runoff Coefficient = 0.892
Decimal fraction soil group A = 0.060
Decimal fraction soil group B = 0.450
Decimal fraction soil group C = 0.000
Decimal fraction soil group D = 0.490
RI index for soil(AMC 3)  =  81.10
Pervious area fraction =  0.100; Impervious fraction =  0.900
Time of concentration =    13.51 min.
```

```
Rainfall intensity =      3.288(In/Hr) for a   100.0 year storm
Subarea runoff =      9.011(CFS) for      3.072(Ac.)
Total runoff =     21.445(CFS)   Total area =       7.273(Ac.)


++++++++++++++++++++++++++++++++++++++++++++++++++++++++++++++++++++++
Process from Point/Station       13.240 to Point/Station       13.050
**** PIPEFLOW TRAVEL TIME (Program estimated size) ****
______________________________________________________________________
Upstream point/station elevation =  2338.900(Ft.)
Downstream point/station elevation =  2335.000(Ft.)
Pipe length  =   784.50(Ft.)   Manning's N = 0.013
No. of pipes = 1  Required pipe flow  =    21.445(CFS)
Nearest computed pipe diameter  =     27.00(In.)
Calculated individual pipe flow  =    21.445(CFS)
Normal flow depth in pipe =   21.70(In.)
Flow top width inside pipe =   21.44(In.)
Critical Depth =   19.45(In.)
Pipe flow velocity =      6.26(Ft/s)
Travel time through pipe =    2.09 min.
Time of concentration (TC) =    15.60 min.


++++++++++++++++++++++++++++++++++++++++++++++++++++++++++++++++++++++
Process from Point/Station       13.240 to Point/Station       13.050
**** CONFLUENCE OF MAIN STREAMS ****
______________________________________________________________________
The following data inside Main Stream is listed:
In Main Stream number: 4
Stream flow area =      7.273(Ac.)
Runoff from this stream =     21.445(CFS)
Time of concentration =   15.60 min.
Rainfall intensity =     3.060(In/Hr)
Program is now starting with Main Stream No. 5


++++++++++++++++++++++++++++++++++++++++++++++++++++++++++++++++++++++
Process from Point/Station       13.060 to Point/Station       13.250
**** INITIAL AREA EVALUATION ****
______________________________________________________________________
Initial area flow distance =   472.000(Ft.)
Top (of initial area) elevation =  2356.600(Ft.)
Bottom (of initial area) elevation =  2351.600(Ft.)
Difference in elevation =     5.000(Ft.)
Slope =    0.01059  s(percent)=       1.06
TC = k(0.300)*[(length^3)/(elevation change)]^0.2
Initial area time of concentration =    8.744 min.
Rainfall intensity =      4.087(In/Hr) for a   100.0 year storm
COMMERCIAL subarea type
Runoff Coefficient = 0.891
Decimal fraction soil group A = 0.000
Decimal fraction soil group B = 1.000
Decimal fraction soil group C = 0.000
Decimal fraction soil group D = 0.000
RI index for soil(AMC 3)  =  74.80
Pervious area fraction =  0.100; Impervious fraction =  0.900
Initial subarea runoff =      4.534(CFS)
Total initial stream area =        1.245(Ac.)
Pervious area fraction = 0.100


++++++++++++++++++++++++++++++++++++++++++++++++++++++++++++++++++++++
Process from Point/Station       13.250 to Point/Station       13.260
**** PIPEFLOW TRAVEL TIME (Program estimated size) ****
______________________________________________________________________
Upstream point/station elevation =  2347.100(Ft.)
```

```
Downstream point/station elevation =  2338.800(Ft.)
Pipe length  =   829.60(Ft.)   Manning's N = 0.013
No. of pipes = 1  Required pipe flow  =     4.534(CFS)
Nearest computed pipe diameter  =     15.00(In.)
Calculated individual pipe flow  =     4.534(CFS)
Normal flow depth in pipe =    9.26(In.)
Flow top width inside pipe =   14.58(In.)
Critical Depth =   10.35(In.)
Pipe flow velocity =      5.70(Ft/s)
Travel time through pipe =    2.43 min.
Time of concentration (TC) =    11.17 min.


++++++++++++++++++++++++++++++++++++++++++++++++++++++++++++++++++++++
Process from Point/Station       13.260 to Point/Station       13.260
**** SUBAREA FLOW ADDITION ****
______________________________________________________________________
COMMERCIAL subarea type
Runoff Coefficient = 0.888
Decimal fraction soil group A = 0.290
Decimal fraction soil group B = 0.670
Decimal fraction soil group C = 0.000
Decimal fraction soil group D = 0.040
RI index for soil(AMC 3)  =  69.80
Pervious area fraction =  0.100; Impervious fraction =  0.900
Time of concentration =    11.17 min.
Rainfall intensity =      3.616(In/Hr) for a   100.0 year storm
Subarea runoff =     59.156(CFS) for     18.433(Ac.)
Total runoff =     63.689(CFS)   Total area =      19.678(Ac.)


++++++++++++++++++++++++++++++++++++++++++++++++++++++++++++++++++++++
Process from Point/Station       13.260 to Point/Station       13.270
**** PIPEFLOW TRAVEL TIME (Program estimated size) ****
______________________________________________________________________
Upstream point/station elevation =  2338.800(Ft.)
Downstream point/station elevation =  2335.100(Ft.)
Pipe length  =   744.80(Ft.)   Manning's N = 0.013
No. of pipes = 1  Required pipe flow  =    63.689(CFS)
Nearest computed pipe diameter  =     42.00(In.)
Calculated individual pipe flow  =    63.689(CFS)
Normal flow depth in pipe =   31.08(In.)
Flow top width inside pipe =   36.85(In.)
Critical Depth =   30.02(In.)
Pipe flow velocity =      8.34(Ft/s)
Travel time through pipe =    1.49 min.
Time of concentration (TC) =    12.66 min.


++++++++++++++++++++++++++++++++++++++++++++++++++++++++++++++++++++++
Process from Point/Station       13.270 to Point/Station       13.270
**** SUBAREA FLOW ADDITION ****
______________________________________________________________________
COMMERCIAL subarea type
Runoff Coefficient = 0.892
Decimal fraction soil group A = 0.000
Decimal fraction soil group B = 0.620
Decimal fraction soil group C = 0.000
Decimal fraction soil group D = 0.380
RI index for soil(AMC 3)  =  80.58
Pervious area fraction =  0.100; Impervious fraction =  0.900
Time of concentration =    12.66 min.
Rainfall intensity =      3.396(In/Hr) for a   100.0 year storm
Subarea runoff =      4.657(CFS) for      1.537(Ac.)
Total runoff =     68.347(CFS)   Total area =      21.215(Ac.)
```

```
++++++++++++++++++++++++++++++++++++++++++++++++++++++++++++++++++++++
Process from Point/Station       13.270 to Point/Station       13.050
**** PIPEFLOW TRAVEL TIME (Program estimated size) ****
______________________________________________________________________
Upstream point/station elevation =  2335.100(Ft.)
Downstream point/station elevation =  2335.000(Ft.)
Pipe length  =    24.60(Ft.)   Manning's N = 0.013
No. of pipes = 1  Required pipe flow  =    68.347(CFS)
Nearest computed pipe diameter  =     42.00(In.)
Calculated individual pipe flow  =    68.347(CFS)
Normal flow depth in pipe =   37.80(In.)
Flow top width inside pipe =   25.20(In.)
Critical Depth =   31.07(In.)
Pipe flow velocity =      7.50(Ft/s)
Travel time through pipe =    0.05 min.
Time of concentration (TC) =    12.71 min.


++++++++++++++++++++++++++++++++++++++++++++++++++++++++++++++++++++++
Process from Point/Station       13.270 to Point/Station       13.050
**** CONFLUENCE OF MAIN STREAMS ****
______________________________________________________________________
The following data inside Main Stream is listed:
In Main Stream number: 5
Stream flow area =     21.215(Ac.)
Runoff from this stream =     68.347(CFS)
Time of concentration =   12.71 min.
Rainfall intensity =     3.389(In/Hr)
Summary of stream data:

Stream   Flow rate      TC            Rainfall Intensity
 No.       (CFS)       (min)                 (In/Hr)


1       54.433     12.24            3.454
2       76.463     14.80            3.141
3       39.772     18.53            2.807
4       21.445     15.60            3.060
5       68.347     12.71            3.389
Largest stream flow has longer or shorter time of concentration
Qp =     76.463 + sum of
         Qb         Ia/Ib
         54.433 *    0.909 =     49.502
         Qa          Tb/Ta
         39.772 *    0.799 =     31.759
         Qa          Tb/Ta
         21.445 *    0.949 =     20.346
         Qb         Ia/Ib
         68.347 *    0.927 =     63.348
Qp =    241.418

Total of 5 main streams to confluence:
Flow rates before confluence point:
      54.433      76.463      39.772      21.445      68.347
Area of streams before confluence:
       17.848       26.612       15.778        7.273       21.215


Results of confluence:
Total flow rate =    241.418(CFS)
Time of concentration =    14.799 min.
Effective stream area after confluence  =     88.726(Ac.)


++++++++++++++++++++++++++++++++++++++++++++++++++++++++++++++++++++++
```

```
Process from Point/Station       13.050 to Point/Station       13.280
**** PIPEFLOW TRAVEL TIME (Program estimated size) ****
______________________________________________________________________
Upstream point/station elevation =  2330.000(Ft.)
Downstream point/station elevation =  2304.000(Ft.)
Pipe length  =  1640.70(Ft.)   Manning's N = 0.013
No. of pipes = 1  Required pipe flow  =   241.418(CFS)
Nearest computed pipe diameter  =     54.00(In.)
Calculated individual pipe flow  =   241.418(CFS)
Normal flow depth in pipe =   43.13(In.)
Flow top width inside pipe =   43.31(In.)
Critical Depth =   50.92(In.)
Pipe flow velocity =     17.74(Ft/s)
Travel time through pipe =    1.54 min.
Time of concentration (TC) =    16.34 min.


++++++++++++++++++++++++++++++++++++++++++++++++++++++++++++++++++++++
Process from Point/Station       13.280 to Point/Station       13.290
**** NATURAL CHANNEL TIME + SUBAREA FLOW ADDITION ****
______________________________________________________________________
Top of natural channel elevation =   2304.000(Ft.)
End of natural channel elevation =   2258.000(Ft.)
Length of natural channel  =   713.400(Ft.)
Estimated mean flow rate at midpoint of channel =    281.131(CFS)

Natural valley channel type used
L.A. County flood control district formula for channel velocity:
 Velocity(ft/s) = (7 + 8(q(English Units)^.352)(slope^0.5)
Velocity using mean channel flow =  16.56(Ft/s)

Correction to map slope used on extremely rugged channels with
drops and waterfalls (Plate D-6.2)
       Normal channel slope =  0.0645
Corrected/adjusted channel slope =  0.0645
Travel time =    0.72 min.     TC =   17.06  min.


 Adding area flow to channel
UNDEVELOPED (poor cover) subarea
Runoff Coefficient = 0.840
Decimal fraction soil group A = 0.510
Decimal fraction soil group B = 0.490
Decimal fraction soil group C = 0.000
Decimal fraction soil group D = 0.000
RI index for soil(AMC 3)  =  86.43
Pervious area fraction =  1.000; Impervious fraction =  0.000
Rainfall intensity =      2.926(In/Hr) for a   100.0 year storm
Subarea runoff =     71.731(CFS) for     29.190(Ac.)
Total runoff =    313.149(CFS)   Total area =     117.916(Ac.)


++++++++++++++++++++++++++++++++++++++++++++++++++++++++++++++++++++++
Process from Point/Station       13.290 to Point/Station       13.300
**** PIPEFLOW TRAVEL TIME (Program estimated size) ****
______________________________________________________________________
Upstream point/station elevation =  2258.000(Ft.)
Downstream point/station elevation =  2249.600(Ft.)
Pipe length  =   168.30(Ft.)   Manning's N = 0.013
No. of pipes = 1  Required pipe flow  =   313.149(CFS)
Nearest computed pipe diameter  =     48.00(In.)
Calculated individual pipe flow  =   313.149(CFS)
Normal flow depth in pipe =   38.34(In.)
Flow top width inside pipe =   38.48(In.)
Critical depth could not be calculated.
Pipe flow velocity =     29.10(Ft/s)
```

```
Travel time through pipe =    0.10 min.
Time of concentration (TC) =    17.15 min.
End of computations, total study area =          117.92 (Ac.)
The following figures may
be used for a unit hydrograph study of the same area.

Area averaged pervious area fraction(Ap) = 0.397
Area averaged RI index number =  58.2
```

```
              Riverside County Rational Hydrology Program

CIVILCADD/CIVILDESIGN Engineering Software,(c) 1989 - 2005 Version 7.1
       Rational Hydrology Study        Date: 11/05/20  File:AREA14.out
------------------------------------------------------------------------
BEAUMONT POINTE
PRELIMINARY HYDROLOGY STUDY
AREA 14 DEVELOPED
100-YEAR
------------------------------------------------------------------------
 *********   Hydrology Study Control Information **********

 English (in-lb) Units used in input data file

------------------------------------------------------------------------


Program License Serial Number 6094

------------------------------------------------------------------------
Rational Method Hydrology Program based on
Riverside County Flood Control & Water Conservation District
1978 hydrology manual

Storm event (year) =  100.00 Antecedent Moisture Condition = 3

2 year, 1 hour precipitation =  0.551(In.)
100 year, 1 hour precipitation =  1.560(In.)

Storm event year = 100.0
Calculated rainfall intensity data:
1 hour intensity =  1.560(In/Hr)
Slope of intensity duration curve = 0.5000




++++++++++++++++++++++++++++++++++++++++++++++++++++++++++++++++++++++
Process from Point/Station       14.000 to Point/Station       14.010
**** INITIAL AREA EVALUATION ****
______________________________________________________________________
Initial area flow distance =   595.000(Ft.)
Top (of initial area) elevation =  2370.000(Ft.)
Bottom (of initial area) elevation =  2279.500(Ft.)
Difference in elevation =    90.500(Ft.)
Slope =    0.15210  s(percent)=      15.21
TC = k(0.530)*[(length^3)/(elevation change)]^0.2
Initial area time of concentration =    9.946 min.
Rainfall intensity =      3.832(In/Hr) for a   100.0 year storm
UNDEVELOPED (poor cover) subarea
Runoff Coefficient = 0.860
Decimal fraction soil group A = 0.240
Decimal fraction soil group B = 0.760
Decimal fraction soil group C = 0.000
Decimal fraction soil group D = 0.000
RI index for soil(AMC 3)  =  88.22
Pervious area fraction =  1.000; Impervious fraction =  0.000
Initial subarea runoff =     13.715(CFS)
Total initial stream area =        4.162(Ac.)
Pervious area fraction = 1.000


++++++++++++++++++++++++++++++++++++++++++++++++++++++++++++++++++++++
Process from Point/Station       14.010 to Point/Station       14.020
```

```
**** PIPEFLOW TRAVEL TIME (Program estimated size) ****
_______________________________________________________________________
Upstream point/station elevation =  2279.500(Ft.)
Downstream point/station elevation =  2274.400(Ft.)
Pipe length  =   141.40(Ft.)   Manning's N = 0.013
No. of pipes = 1  Required pipe flow  =    13.715(CFS)
Nearest computed pipe diameter  =     18.00(In.)
Calculated individual pipe flow  =    13.715(CFS)
Normal flow depth in pipe =   10.97(In.)
Flow top width inside pipe =   17.56(In.)
Critical Depth =   16.48(In.)
Pipe flow velocity =     12.17(Ft/s)
Travel time through pipe =    0.19 min.
Time of concentration (TC) =    10.14 min.
End of computations, total study area =            4.16 (Ac.)
The following figures may
be used for a unit hydrograph study of the same area.

Area averaged pervious area fraction(Ap) = 1.000
Area averaged RI index number =  75.4
```

```
              Riverside County Rational Hydrology Program

CIVILCADD/CIVILDESIGN Engineering Software,(c) 1989 - 2005 Version 7.1
       Rational Hydrology Study        Date: 11/05/20  File:AREA15.out
------------------------------------------------------------------------
BEAUMONT POINTE
PRELIMINARY HYDROLOGY STUDY
AREA 15 DEVELOPED
100-YEAR
------------------------------------------------------------------------
 *********   Hydrology Study Control Information **********

 English (in-lb) Units used in input data file

------------------------------------------------------------------------


Program License Serial Number 6094

------------------------------------------------------------------------
Rational Method Hydrology Program based on
Riverside County Flood Control & Water Conservation District
1978 hydrology manual

Storm event (year) =  100.00 Antecedent Moisture Condition = 3

2 year, 1 hour precipitation =  0.551(In.)
100 year, 1 hour precipitation =  1.560(In.)

Storm event year = 100.0
Calculated rainfall intensity data:
1 hour intensity =  1.560(In/Hr)
Slope of intensity duration curve = 0.5000




++++++++++++++++++++++++++++++++++++++++++++++++++++++++++++++++++++++
Process from Point/Station       15.000 to Point/Station       15.010
**** INITIAL AREA EVALUATION ****
______________________________________________________________________
Initial area flow distance =   838.600(Ft.)
Top (of initial area) elevation =  2366.000(Ft.)
Bottom (of initial area) elevation =  2287.800(Ft.)
Difference in elevation =    78.200(Ft.)
Slope =    0.09325  s(percent)=       9.33
TC = k(0.530)*[(length^3)/(elevation change)]^0.2
Initial area time of concentration =   12.583 min.
Rainfall intensity =      3.407(In/Hr) for a   100.0 year storm
UNDEVELOPED (poor cover) subarea
Runoff Coefficient = 0.848
Decimal fraction soil group A = 0.520
Decimal fraction soil group B = 0.480
Decimal fraction soil group C = 0.000
Decimal fraction soil group D = 0.000
RI index for soil(AMC 3)  =  86.37
Pervious area fraction =  1.000; Impervious fraction =  0.000
Initial subarea runoff =     22.150(CFS)
Total initial stream area =        7.671(Ac.)
Pervious area fraction = 1.000


++++++++++++++++++++++++++++++++++++++++++++++++++++++++++++++++++++++
Process from Point/Station       15.010 to Point/Station       15.020
```

```
**** PIPEFLOW TRAVEL TIME (Program estimated size) ****
_____________________________________________________________________
Upstream point/station elevation =  2287.800(Ft.)
Downstream point/station elevation =  2283.200(Ft.)
Pipe length  =   123.60(Ft.)   Manning's N = 0.013
No. of pipes = 1  Required pipe flow  =    22.150(CFS)
Nearest computed pipe diameter  =     21.00(In.)
Calculated individual pipe flow  =    22.150(CFS)
Normal flow depth in pipe =   13.25(In.)
Flow top width inside pipe =   20.26(In.)
Critical Depth =   19.70(In.)
Pipe flow velocity =     13.85(Ft/s)
Travel time through pipe =    0.15 min.
Time of concentration (TC) =    12.73 min.
End of computations, total study area =            7.67 (Ac.)
The following figures may
be used for a unit hydrograph study of the same area.

Area averaged pervious area fraction(Ap) = 1.000
Area averaged RI index number =  72.3
```

```
                Riverside County Rational Hydrology Program

CIVILCADD/CIVILDESIGN Engineering Software,(c) 1989 - 2005 Version 7.1
        Rational Hydrology Study        Date: 04/22/22  File:AREA16.out
------------------------------------------------------------------------
BEAUMONT POINTE
PRELIMINARY HYDROLOGY STUDY
AREA 16 DEVELOPED
100-YEAR
------------------------------------------------------------------------
 *********   Hydrology Study Control Information **********

 English (in-lb) Units used in input data file

------------------------------------------------------------------------


Program License Serial Number 6094

------------------------------------------------------------------------
Rational Method Hydrology Program based on
Riverside County Flood Control & Water Conservation District
1978 hydrology manual

Storm event (year) =  100.00 Antecedent Moisture Condition = 3

2 year, 1 hour precipitation =  0.551(In.)
100 year, 1 hour precipitation =  1.560(In.)

Storm event year = 100.0
Calculated rainfall intensity data:
1 hour intensity =  1.560(In/Hr)
Slope of intensity duration curve = 0.5000




++++++++++++++++++++++++++++++++++++++++++++++++++++++++++++++++++++++
Process from Point/Station       16.000 to Point/Station       16.010
**** INITIAL AREA EVALUATION ****
______________________________________________________________________
Initial area flow distance =   235.000(Ft.)
Top (of initial area) elevation =  2500.000(Ft.)
Bottom (of initial area) elevation =  2414.400(Ft.)
Difference in elevation =    85.600(Ft.)
Slope =    0.36426  s(percent)=      36.43
TC = k(0.480)*[(length^3)/(elevation change)]^0.2
Initial area time of concentration =    5.217 min.
```

```
Rainfall intensity =      5.291(In/Hr) for a   100.0 year storm
SINGLE FAMILY (1 Acre Lot)
Runoff Coefficient = 0.846
Decimal fraction soil group A = 0.000
Decimal fraction soil group B = 0.950
Decimal fraction soil group C = 0.000
Decimal fraction soil group D = 0.050
RI index for soil(AMC 3)  =  75.56
Pervious area fraction =  0.800; Impervious fraction =  0.200
Initial subarea runoff =      2.465(CFS)
Total initial stream area =        0.551(Ac.)
Pervious area fraction = 0.800


++++++++++++++++++++++++++++++++++++++++++++++++++++++++++++++++++++++
Process from Point/Station       16.010 to Point/Station       16.020
**** STREET FLOW TRAVEL TIME + SUBAREA FLOW ADDITION ****
______________________________________________________________________
Top of street segment elevation =  2414.400(Ft.)
End of street segment elevation =  2395.700(Ft.)
Length of street segment  =  1303.900(Ft.)
Height of curb above gutter flowline  =    6.0(In.)
Width of half street (curb to crown)  =  28.000(Ft.)
Distance from crown to crossfall grade break  =  26.000(Ft.)
Slope from gutter to grade break (v/hz) =   0.065
Slope from grade break to crown (v/hz)  =   0.020
Street flow is on [1] side(s) of the street
Distance from curb to property line  =  13.000(Ft.)
Slope from curb to property line (v/hz) =   0.020
Gutter width =   2.000(Ft.)
Gutter hike from flowline =  2.000(In.)
 Manning's N in gutter =  0.0150
 Manning's N from gutter to grade break =  0.0150
 Manning's N from grade break to crown =  0.0150
Estimated mean flow rate at midpoint of street =      7.360(CFS)
Depth of flow =   0.415(Ft.), Average velocity =   3.330(Ft/s)
Streetflow hydraulics at midpoint of street travel:
Halfstreet flow width =  14.434(Ft.)
Flow velocity =   3.33(Ft/s)
Travel time =    6.53 min.     TC =   11.74  min.
 Adding area flow to street
SINGLE FAMILY (1/4 Acre Lot)
Runoff Coefficient = 0.851
Decimal fraction soil group A = 0.080
Decimal fraction soil group B = 0.780
Decimal fraction soil group C = 0.000
Decimal fraction soil group D = 0.140
RI index for soil(AMC 3)  =  75.39
Pervious area fraction =  0.500; Impervious fraction =  0.500
Rainfall intensity =      3.526(In/Hr) for a   100.0 year storm
```

```
Subarea runoff =      9.697(CFS) for      3.233(Ac.)
Total runoff =     12.163(CFS)  Total area =       3.784(Ac.)
Street flow at end of street =     12.163(CFS)
Half street flow at end of street =     12.163(CFS)
Depth of flow =   0.479(Ft.), Average velocity =   3.761(Ft/s)
Flow width (from curb towards crown)=  17.627(Ft.)


++++++++++++++++++++++++++++++++++++++++++++++++++++++++++++++++++++++
Process from Point/Station       16.020 to Point/Station       16.030
**** PIPEFLOW TRAVEL TIME (Program estimated size) ****
______________________________________________________________________
Upstream point/station elevation =  2389.700(Ft.)
Downstream point/station elevation =  2357.800(Ft.)
Pipe length  =  1023.80(Ft.)   Manning's N = 0.013
No. of pipes = 1  Required pipe flow  =    12.163(CFS)
Nearest computed pipe diameter  =     15.00(In.)
Calculated individual pipe flow  =    12.163(CFS)
Normal flow depth in pipe =   13.50(In.)
Flow top width inside pipe =    9.00(In.)
Critical depth could not be calculated.
Pipe flow velocity =     10.45(Ft/s)
Travel time through pipe =    1.63 min.
Time of concentration (TC) =    13.38 min.


++++++++++++++++++++++++++++++++++++++++++++++++++++++++++++++++++++++
Process from Point/Station       16.020 to Point/Station       16.030
**** CONFLUENCE OF MAIN STREAMS ****
______________________________________________________________________
The following data inside Main Stream is listed:
In Main Stream number: 1
Stream flow area =      3.784(Ac.)
Runoff from this stream =     12.163(CFS)
Time of concentration =   13.38 min.
Rainfall intensity =     3.304(In/Hr)
Program is now starting with Main Stream No. 2


++++++++++++++++++++++++++++++++++++++++++++++++++++++++++++++++++++++
Process from Point/Station       16.040 to Point/Station       16.050
**** INITIAL AREA EVALUATION ****
______________________________________________________________________
Initial area flow distance =   557.600(Ft.)
Top (of initial area) elevation =  2485.000(Ft.)
Bottom (of initial area) elevation =  2393.600(Ft.)
Difference in elevation =    91.400(Ft.)
Slope =    0.16392  s(percent)=      16.39
TC = k(0.940)*[(length^3)/(elevation change)]^0.2
Initial area time of concentration =   16.933 min.
```

```
Rainfall intensity =      2.937(In/Hr) for a   100.0 year storm
UNDEVELOPED (good cover) subarea
Runoff Coefficient = 0.859
Decimal fraction soil group A = 0.000
Decimal fraction soil group B = 0.050
Decimal fraction soil group C = 0.000
Decimal fraction soil group D = 0.950
RI index for soil(AMC 3)  =  90.43
Pervious area fraction =  1.000; Impervious fraction =  0.000
Initial subarea runoff =      1.932(CFS)
Total initial stream area =        0.766(Ac.)
Pervious area fraction = 1.000


++++++++++++++++++++++++++++++++++++++++++++++++++++++++++++++++++++++
Process from Point/Station       16.050 to Point/Station       16.060
**** STREET FLOW TRAVEL TIME + SUBAREA FLOW ADDITION ****
______________________________________________________________________
Top of street segment elevation =  2393.600(Ft.)
End of street segment elevation =  2365.000(Ft.)
Length of street segment  =   919.300(Ft.)
Height of curb above gutter flowline  =    6.0(In.)
Width of half street (curb to crown)  =  28.000(Ft.)
Distance from crown to crossfall grade break  =  26.000(Ft.)
Slope from gutter to grade break (v/hz) =   0.065
Slope from grade break to crown (v/hz)  =   0.020
Street flow is on [1] side(s) of the street
Distance from curb to property line  =  13.000(Ft.)
Slope from curb to property line (v/hz) =   0.020
Gutter width =   2.000(Ft.)
Gutter hike from flowline =  2.000(In.)
 Manning's N in gutter =  0.0150
 Manning's N from gutter to grade break =  0.0150
 Manning's N from grade break to crown =  0.0150
Estimated mean flow rate at midpoint of street =      6.687(CFS)
Depth of flow =   0.364(Ft.), Average velocity =   4.373(Ft/s)
Streetflow hydraulics at midpoint of street travel:
Halfstreet flow width =  11.843(Ft.)
Flow velocity =   4.37(Ft/s)
Travel time =    3.50 min.     TC =   20.44  min.
 Adding area flow to street
SINGLE FAMILY (1/4 Acre Lot)
Runoff Coefficient = 0.841
Decimal fraction soil group A = 0.000
Decimal fraction soil group B = 0.860
Decimal fraction soil group C = 0.000
Decimal fraction soil group D = 0.140
RI index for soil(AMC 3)  =  76.93
Pervious area fraction =  0.500; Impervious fraction =  0.500
Rainfall intensity =      2.673(In/Hr) for a   100.0 year storm
```

```
Subarea runoff =      9.435(CFS) for      4.195(Ac.)
Total runoff =     11.367(CFS)  Total area =       4.961(Ac.)
Street flow at end of street =     11.367(CFS)
Half street flow at end of street =     11.367(CFS)
Depth of flow =   0.421(Ft.), Average velocity =   4.961(Ft/s)
Flow width (from curb towards crown)=  14.712(Ft.)


++++++++++++++++++++++++++++++++++++++++++++++++++++++++++++++++++++++
Process from Point/Station       16.060 to Point/Station       16.070
**** PIPEFLOW TRAVEL TIME (Program estimated size) ****
______________________________________________________________________
Upstream point/station elevation =  2359.400(Ft.)
Downstream point/station elevation =  2358.800(Ft.)
Pipe length  =    57.30(Ft.)   Manning's N = 0.013
No. of pipes = 1  Required pipe flow  =    11.367(CFS)
Nearest computed pipe diameter  =     21.00(In.)
Calculated individual pipe flow  =    11.367(CFS)
Normal flow depth in pipe =   12.96(In.)
Flow top width inside pipe =   20.42(In.)
Critical Depth =   15.08(In.)
Pipe flow velocity =      7.30(Ft/s)
Travel time through pipe =    0.13 min.
Time of concentration (TC) =    20.57 min.


++++++++++++++++++++++++++++++++++++++++++++++++++++++++++++++++++++++
Process from Point/Station       16.070 to Point/Station       16.070
**** SUBAREA FLOW ADDITION ****
______________________________________________________________________
COMMERCIAL subarea type
Runoff Coefficient = 0.886
Decimal fraction soil group A = 0.120
Decimal fraction soil group B = 0.790
Decimal fraction soil group C = 0.000
Decimal fraction soil group D = 0.090
RI index for soil(AMC 3)  =  73.86
Pervious area fraction =  0.100; Impervious fraction =  0.900
Time of concentration =    20.57 min.
Rainfall intensity =      2.664(In/Hr) for a   100.0 year storm
Subarea runoff =      7.046(CFS) for      2.983(Ac.)
Total runoff =     18.412(CFS)  Total area =       7.944(Ac.)


++++++++++++++++++++++++++++++++++++++++++++++++++++++++++++++++++++++
Process from Point/Station       16.070 to Point/Station       16.080
**** PIPEFLOW TRAVEL TIME (Program estimated size) ****
______________________________________________________________________
Upstream point/station elevation =  2358.800(Ft.)
Downstream point/station elevation =  2358.600(Ft.)
```

```
Pipe length  =    23.30(Ft.)   Manning's N = 0.013
No. of pipes = 1  Required pipe flow  =    18.412(CFS)
Nearest computed pipe diameter  =     24.00(In.)
Calculated individual pipe flow  =    18.412(CFS)
Normal flow depth in pipe =   17.44(In.)
Flow top width inside pipe =   21.39(In.)
Critical Depth =   18.54(In.)
Pipe flow velocity =      7.53(Ft/s)
Travel time through pipe =    0.05 min.
Time of concentration (TC) =    20.62 min.


++++++++++++++++++++++++++++++++++++++++++++++++++++++++++++++++++++++
Process from Point/Station       16.080 to Point/Station       16.080
**** SUBAREA FLOW ADDITION ****
______________________________________________________________________
COMMERCIAL subarea type
Runoff Coefficient = 0.887
Decimal fraction soil group A = 0.180
Decimal fraction soil group B = 0.640
Decimal fraction soil group C = 0.000
Decimal fraction soil group D = 0.180
RI index for soil(AMC 3)  =  74.08
Pervious area fraction =  0.100; Impervious fraction =  0.900
Time of concentration =    20.62 min.
Rainfall intensity =      2.661(In/Hr) for a   100.0 year storm
Subarea runoff =     40.764(CFS) for     17.278(Ac.)
Total runoff =     59.176(CFS)  Total area =      25.222(Ac.)


++++++++++++++++++++++++++++++++++++++++++++++++++++++++++++++++++++++
Process from Point/Station       16.080 to Point/Station       16.030
**** PIPEFLOW TRAVEL TIME (Program estimated size) ****
______________________________________________________________________
Upstream point/station elevation =  2358.600(Ft.)
Downstream point/station elevation =  2357.800(Ft.)
Pipe length  =    75.70(Ft.)   Manning's N = 0.013
No. of pipes = 1  Required pipe flow  =    59.176(CFS)
Nearest computed pipe diameter  =     36.00(In.)
Calculated individual pipe flow  =    59.176(CFS)
Normal flow depth in pipe =   25.80(In.)
Flow top width inside pipe =   32.44(In.)
Critical Depth =   29.84(In.)
Pipe flow velocity =     10.91(Ft/s)
Travel time through pipe =    0.12 min.
Time of concentration (TC) =    20.73 min.


++++++++++++++++++++++++++++++++++++++++++++++++++++++++++++++++++++++
Process from Point/Station       16.080 to Point/Station       16.030
```

```
**** CONFLUENCE OF MAIN STREAMS ****
_____________________________________________________________________
The following data inside Main Stream is listed:
In Main Stream number: 2
Stream flow area =     25.222(Ac.)
Runoff from this stream =     59.176(CFS)
Time of concentration =   20.73 min.
Rainfall intensity =     2.654(In/Hr)
Summary of stream data:

Stream   Flow rate      TC            Rainfall Intensity
 No.       (CFS)       (min)                 (In/Hr)


1       12.163     13.38                 3.304
2       59.176     20.73                 2.654
Largest stream flow has longer time of concentration
Qp =     59.176 + sum of
          Qb         Ia/Ib
          12.163 *    0.803 =      9.768
Qp =     68.944

Total of 2 main streams to confluence:
Flow rates before confluence point:
      12.163      59.176
Area of streams before confluence:
        3.784       25.222


Results of confluence:
Total flow rate =     68.944(CFS)
Time of concentration =    20.735 min.
Effective stream area after confluence  =     29.006(Ac.)


++++++++++++++++++++++++++++++++++++++++++++++++++++++++++++++++++++++
Process from Point/Station       16.030 to Point/Station       16.090
**** PIPEFLOW TRAVEL TIME (Program estimated size) ****
_____________________________________________________________________
Upstream point/station elevation =  2357.800(Ft.)
Downstream point/station elevation =  2352.400(Ft.)
Pipe length  =  1080.00(Ft.)   Manning's N = 0.013
No. of pipes = 1  Required pipe flow  =    68.944(CFS)
Nearest computed pipe diameter  =     42.00(In.)
Calculated individual pipe flow  =    68.944(CFS)
Normal flow depth in pipe =   33.28(In.)
Flow top width inside pipe =   34.07(In.)
Critical Depth =   31.20(In.)
Pipe flow velocity =      8.42(Ft/s)
Travel time through pipe =    2.14 min.
```

```
Time of concentration (TC) =    22.87 min.


++++++++++++++++++++++++++++++++++++++++++++++++++++++++++++++++++++++
Process from Point/Station       16.090 to Point/Station       16.090
**** SUBAREA FLOW ADDITION ****
______________________________________________________________________
COMMERCIAL subarea type
Runoff Coefficient = 0.885
Decimal fraction soil group A = 0.150
Decimal fraction soil group B = 0.850
Decimal fraction soil group C = 0.000
Decimal fraction soil group D = 0.000
RI index for soil(AMC 3)  =  71.92
Pervious area fraction =  0.100; Impervious fraction =  0.900
Time of concentration =    22.87 min.
Rainfall intensity =      2.527(In/Hr) for a   100.0 year storm
Subarea runoff =     18.534(CFS) for      8.292(Ac.)
Total runoff =     87.478(CFS)  Total area =      37.298(Ac.)


++++++++++++++++++++++++++++++++++++++++++++++++++++++++++++++++++++++
Process from Point/Station       16.090 to Point/Station       16.100
**** PIPEFLOW TRAVEL TIME (Program estimated size) ****
______________________________________________________________________
Upstream point/station elevation =  2352.400(Ft.)
Downstream point/station elevation =  2350.100(Ft.)
Pipe length  =   463.60(Ft.)   Manning's N = 0.013
No. of pipes = 1  Required pipe flow  =    87.478(CFS)
Nearest computed pipe diameter  =     45.00(In.)
Calculated individual pipe flow  =    87.478(CFS)
Normal flow depth in pipe =   38.06(In.)
Flow top width inside pipe =   32.50(In.)
Critical Depth =   34.56(In.)
Pipe flow velocity =      8.78(Ft/s)
Travel time through pipe =    0.88 min.
Time of concentration (TC) =    23.75 min.


++++++++++++++++++++++++++++++++++++++++++++++++++++++++++++++++++++++
Process from Point/Station       16.100 to Point/Station       16.100
**** SUBAREA FLOW ADDITION ****
______________________________________________________________________
COMMERCIAL subarea type
Runoff Coefficient = 0.886
Decimal fraction soil group A = 0.000
Decimal fraction soil group B = 1.000
Decimal fraction soil group C = 0.000
Decimal fraction soil group D = 0.000
RI index for soil(AMC 3)  =  74.80
```

```
Pervious area fraction =  0.100; Impervious fraction =  0.900
Time of concentration =    23.75 min.
Rainfall intensity =      2.479(In/Hr) for a   100.0 year storm
Subarea runoff =      5.236(CFS) for      2.383(Ac.)
Total runoff =     92.714(CFS)  Total area =      39.681(Ac.)


++++++++++++++++++++++++++++++++++++++++++++++++++++++++++++++++++++++
Process from Point/Station       16.100 to Point/Station       16.110
**** PIPEFLOW TRAVEL TIME (Program estimated size) ****
______________________________________________________________________
Upstream point/station elevation =  2350.100(Ft.)
Downstream point/station elevation =  2350.000(Ft.)
Pipe length  =    23.50(Ft.)   Manning's N = 0.013
No. of pipes = 1  Required pipe flow  =    92.714(CFS)
Nearest computed pipe diameter  =     48.00(In.)
Calculated individual pipe flow  =    92.714(CFS)
Normal flow depth in pipe =   38.91(In.)
Flow top width inside pipe =   37.62(In.)
Critical Depth =   35.03(In.)
Pipe flow velocity =      8.50(Ft/s)
Travel time through pipe =    0.05 min.
Time of concentration (TC) =    23.80 min.


++++++++++++++++++++++++++++++++++++++++++++++++++++++++++++++++++++++
Process from Point/Station       16.110 to Point/Station       16.110
**** SUBAREA FLOW ADDITION ****
______________________________________________________________________
UNDEVELOPED (good cover) subarea
Runoff Coefficient = 0.748
Decimal fraction soil group A = 0.340
Decimal fraction soil group B = 0.660
Decimal fraction soil group C = 0.000
Decimal fraction soil group D = 0.000
RI index for soil(AMC 3)  =  72.54
Pervious area fraction =  1.000; Impervious fraction =  0.000
Time of concentration =    23.80 min.
Rainfall intensity =      2.477(In/Hr) for a   100.0 year storm
Subarea runoff =      5.671(CFS) for      3.062(Ac.)
Total runoff =     98.385(CFS)  Total area =      42.743(Ac.)


++++++++++++++++++++++++++++++++++++++++++++++++++++++++++++++++++++++
Process from Point/Station       16.110 to Point/Station       16.110
**** CONFLUENCE OF MAIN STREAMS ****
______________________________________________________________________
The following data inside Main Stream is listed:
In Main Stream number: 1
Stream flow area =     42.743(Ac.)
```

```
Runoff from this stream =     98.385(CFS)
Time of concentration =   23.80 min.
Rainfall intensity =     2.477(In/Hr)
Program is now starting with Main Stream No. 2


++++++++++++++++++++++++++++++++++++++++++++++++++++++++++++++++++++++
Process from Point/Station       16.120 to Point/Station       16.130
**** INITIAL AREA EVALUATION ****
______________________________________________________________________
Initial area flow distance =   384.100(Ft.)
Top (of initial area) elevation =  2450.000(Ft.)
Bottom (of initial area) elevation =  2366.300(Ft.)
Difference in elevation =    83.700(Ft.)
Slope =    0.21791  s(percent)=      21.79
TC = k(0.940)*[(length^3)/(elevation change)]^0.2
Initial area time of concentration =   13.780 min.
Rainfall intensity =      3.255(In/Hr) for a   100.0 year storm
UNDEVELOPED (good cover) subarea
Runoff Coefficient = 0.859
Decimal fraction soil group A = 0.000
Decimal fraction soil group B = 0.120
Decimal fraction soil group C = 0.000
Decimal fraction soil group D = 0.880
RI index for soil(AMC 3)  =  89.63
Pervious area fraction =  1.000; Impervious fraction =  0.000
Initial subarea runoff =      4.506(CFS)
Total initial stream area =        1.611(Ac.)
Pervious area fraction = 1.000


++++++++++++++++++++++++++++++++++++++++++++++++++++++++++++++++++++++
Process from Point/Station       16.130 to Point/Station       16.140
**** STREET FLOW TRAVEL TIME + SUBAREA FLOW ADDITION ****
______________________________________________________________________
Top of street segment elevation =  2366.300(Ft.)
End of street segment elevation =  2359.800(Ft.)
Length of street segment  =  1402.700(Ft.)
Height of curb above gutter flowline  =    6.0(In.)
Width of half street (curb to crown)  =  28.000(Ft.)
Distance from crown to crossfall grade break  =  26.000(Ft.)
Slope from gutter to grade break (v/hz) =   0.065
Slope from grade break to crown (v/hz)  =   0.020
Street flow is on [1] side(s) of the street
Distance from curb to property line  =  13.000(Ft.)
Slope from curb to property line (v/hz) =   0.020
Gutter width =   2.000(Ft.)
Gutter hike from flowline =  2.000(In.)
 Manning's N in gutter =  0.0150
 Manning's N from gutter to grade break =  0.0150
```

```
 Manning's N from grade break to crown =  0.0150
Estimated mean flow rate at midpoint of street =      8.899(CFS)
Depth of flow =   0.520(Ft.), Average velocity =   2.222(Ft/s)
Warning: depth of flow exceeds top of curb
Distance that curb overflow reaches into property =    1.00(Ft.)
Streetflow hydraulics at midpoint of street travel:
Halfstreet flow width =  19.669(Ft.)
Flow velocity =   2.22(Ft/s)
Travel time =   10.52 min.     TC =   24.30  min.
 Adding area flow to street
SINGLE FAMILY (1/4 Acre Lot)
Runoff Coefficient = 0.839
Decimal fraction soil group A = 0.000
Decimal fraction soil group B = 0.820
Decimal fraction soil group C = 0.000
Decimal fraction soil group D = 0.180
RI index for soil(AMC 3)  =  77.54
Pervious area fraction =  0.500; Impervious fraction =  0.500
Rainfall intensity =      2.451(In/Hr) for a   100.0 year storm
Subarea runoff =      8.735(CFS) for      4.249(Ac.)
Total runoff =     13.242(CFS)  Total area =       5.860(Ac.)
Street flow at end of street =     13.242(CFS)
Half street flow at end of street =     13.242(CFS)
Depth of flow =   0.590(Ft.), Average velocity =   2.323(Ft/s)
Warning: depth of flow exceeds top of curb
Distance that curb overflow reaches into property =    4.51(Ft.)
Flow width (from curb towards crown)=  23.174(Ft.)


++++++++++++++++++++++++++++++++++++++++++++++++++++++++++++++++++++++
Process from Point/Station       16.140 to Point/Station       16.150
**** PIPEFLOW TRAVEL TIME (Program estimated size) ****
______________________________________________________________________
Upstream point/station elevation =  2352.900(Ft.)
Downstream point/station elevation =  2351.800(Ft.)
Pipe length  =    57.30(Ft.)   Manning's N = 0.013
No. of pipes = 1  Required pipe flow  =    13.242(CFS)
Nearest computed pipe diameter  =     18.00(In.)
Calculated individual pipe flow  =    13.242(CFS)
Normal flow depth in pipe =   13.48(In.)
Flow top width inside pipe =   15.62(In.)
Critical Depth =   16.30(In.)
Pipe flow velocity =      9.33(Ft/s)
Travel time through pipe =    0.10 min.
Time of concentration (TC) =    24.40 min.


++++++++++++++++++++++++++++++++++++++++++++++++++++++++++++++++++++++
Process from Point/Station       16.150 to Point/Station       16.150
**** SUBAREA FLOW ADDITION ****
```

```
____________________________________________________________________
COMMERCIAL subarea type
Runoff Coefficient = 0.888
Decimal fraction soil group A = 0.000
Decimal fraction soil group B = 0.830
Decimal fraction soil group C = 0.000
Decimal fraction soil group D = 0.170
RI index for soil(AMC 3)  =  77.38
Pervious area fraction =  0.100; Impervious fraction =  0.900
Time of concentration =    24.40 min.
Rainfall intensity =      2.446(In/Hr) for a   100.0 year storm
Subarea runoff =      3.691(CFS) for      1.700(Ac.)
Total runoff =     16.933(CFS)  Total area =       7.560(Ac.)


++++++++++++++++++++++++++++++++++++++++++++++++++++++++++++++++++++++
Process from Point/Station       16.150 to Point/Station       16.110
**** PIPEFLOW TRAVEL TIME (Program estimated size) ****
____________________________________________________________________
Upstream point/station elevation =  2351.800(Ft.)
Downstream point/station elevation =  2350.000(Ft.)
Pipe length  =    91.20(Ft.)   Manning's N = 0.013
No. of pipes = 1  Required pipe flow  =    16.933(CFS)
Nearest computed pipe diameter  =     21.00(In.)
Calculated individual pipe flow  =    16.933(CFS)
Normal flow depth in pipe =   13.71(In.)
Flow top width inside pipe =   19.99(In.)
Critical Depth =   18.11(In.)
Pipe flow velocity =     10.19(Ft/s)
Travel time through pipe =    0.15 min.
Time of concentration (TC) =    24.55 min.


++++++++++++++++++++++++++++++++++++++++++++++++++++++++++++++++++++++
Process from Point/Station       16.150 to Point/Station       16.110
**** CONFLUENCE OF MAIN STREAMS ****
____________________________________________________________________
The following data inside Main Stream is listed:
In Main Stream number: 2
Stream flow area =      7.560(Ac.)
Runoff from this stream =     16.933(CFS)
Time of concentration =   24.55 min.
Rainfall intensity =     2.439(In/Hr)
Program is now starting with Main Stream No. 3


++++++++++++++++++++++++++++++++++++++++++++++++++++++++++++++++++++++
Process from Point/Station       16.160 to Point/Station       16.170
**** INITIAL AREA EVALUATION ****
____________________________________________________________________
```

```
Initial area flow distance =   328.400(Ft.)
Top (of initial area) elevation =  2364.100(Ft.)
Bottom (of initial area) elevation =  2360.000(Ft.)
Difference in elevation =     4.100(Ft.)
Slope =    0.01248  s(percent)=       1.25
TC = k(0.300)*[(length^3)/(elevation change)]^0.2
Initial area time of concentration =    7.318 min.
Rainfall intensity =      4.467(In/Hr) for a   100.0 year storm
COMMERCIAL subarea type
Runoff Coefficient = 0.888
Decimal fraction soil group A = 0.410
Decimal fraction soil group B = 0.590
Decimal fraction soil group C = 0.000
Decimal fraction soil group D = 0.000
RI index for soil(AMC 3)  =  66.16
Pervious area fraction =  0.100; Impervious fraction =  0.900
Initial subarea runoff =      5.462(CFS)
Total initial stream area =        1.377(Ac.)
Pervious area fraction = 0.100


++++++++++++++++++++++++++++++++++++++++++++++++++++++++++++++++++++++
Process from Point/Station       16.170 to Point/Station       16.110
**** PIPEFLOW TRAVEL TIME (Program estimated size) ****
______________________________________________________________________
Upstream point/station elevation =  2354.000(Ft.)
Downstream point/station elevation =  2350.000(Ft.)
Pipe length  =    24.60(Ft.)   Manning's N = 0.013
No. of pipes = 1  Required pipe flow  =     5.462(CFS)
Nearest computed pipe diameter  =      9.00(In.)
Calculated individual pipe flow  =     5.462(CFS)
Normal flow depth in pipe =    6.20(In.)
Flow top width inside pipe =    8.33(In.)
Critical depth could not be calculated.
Pipe flow velocity =     16.85(Ft/s)
Travel time through pipe =    0.02 min.
Time of concentration (TC) =     7.34 min.


++++++++++++++++++++++++++++++++++++++++++++++++++++++++++++++++++++++
Process from Point/Station       16.170 to Point/Station       16.110
**** CONFLUENCE OF MAIN STREAMS ****
______________________________________________________________________
The following data inside Main Stream is listed:
In Main Stream number: 3
Stream flow area =      1.377(Ac.)
Runoff from this stream =      5.462(CFS)
Time of concentration =    7.34 min.
Rainfall intensity =     4.459(In/Hr)
Program is now starting with Main Stream No. 4
```

```
++++++++++++++++++++++++++++++++++++++++++++++++++++++++++++++++++++++
Process from Point/Station       16.180 to Point/Station       16.190
**** INITIAL AREA EVALUATION ****
______________________________________________________________________
Initial area flow distance =   490.700(Ft.)
Top (of initial area) elevation =  2367.800(Ft.)
Bottom (of initial area) elevation =  2360.000(Ft.)
Difference in elevation =     7.800(Ft.)
Slope =    0.01590  s(percent)=       1.59
TC = k(0.300)*[(length^3)/(elevation change)]^0.2
Initial area time of concentration =    8.188 min.
Rainfall intensity =      4.223(In/Hr) for a   100.0 year storm
COMMERCIAL subarea type
Runoff Coefficient = 0.888
Decimal fraction soil group A = 0.360
Decimal fraction soil group B = 0.640
Decimal fraction soil group C = 0.000
Decimal fraction soil group D = 0.000
RI index for soil(AMC 3)  =  67.36
Pervious area fraction =  0.100; Impervious fraction =  0.900
Initial subarea runoff =     10.857(CFS)
Total initial stream area =        2.895(Ac.)
Pervious area fraction = 0.100


++++++++++++++++++++++++++++++++++++++++++++++++++++++++++++++++++++++
Process from Point/Station       19.190 to Point/Station       16.110
**** PIPEFLOW TRAVEL TIME (Program estimated size) ****
______________________________________________________________________
Upstream point/station elevation =  2354.000(Ft.)
Downstream point/station elevation =  2350.000(Ft.)
Pipe length  =    24.60(Ft.)   Manning's N = 0.013
No. of pipes = 1  Required pipe flow  =    10.857(CFS)
Nearest computed pipe diameter  =     12.00(In.)
Calculated individual pipe flow  =    10.857(CFS)
Normal flow depth in pipe =    7.79(In.)
Flow top width inside pipe =   11.45(In.)
Critical depth could not be calculated.
Pipe flow velocity =     20.10(Ft/s)
Travel time through pipe =    0.02 min.
Time of concentration (TC) =     8.21 min.


++++++++++++++++++++++++++++++++++++++++++++++++++++++++++++++++++++++
Process from Point/Station       19.190 to Point/Station       16.110
**** CONFLUENCE OF MAIN STREAMS ****
______________________________________________________________________
The following data inside Main Stream is listed:
```

```
In Main Stream number: 4
Stream flow area =      2.895(Ac.)
Runoff from this stream =     10.857(CFS)
Time of concentration =    8.21 min.
Rainfall intensity =     4.218(In/Hr)
Program is now starting with Main Stream No. 5


++++++++++++++++++++++++++++++++++++++++++++++++++++++++++++++++++++++
Process from Point/Station       16.200 to Point/Station       16.210
**** INITIAL AREA EVALUATION ****
______________________________________________________________________
Initial area flow distance =   912.000(Ft.)
Top (of initial area) elevation =  2394.400(Ft.)
Bottom (of initial area) elevation =  2368.700(Ft.)
Difference in elevation =    25.700(Ft.)
Slope =    0.02818  s(percent)=       2.82
TC = k(0.300)*[(length^3)/(elevation change)]^0.2
Initial area time of concentration =    9.357 min.
Rainfall intensity =      3.950(In/Hr) for a   100.0 year storm
COMMERCIAL subarea type
Runoff Coefficient = 0.884
Decimal fraction soil group A = 0.610
Decimal fraction soil group B = 0.390
Decimal fraction soil group C = 0.000
Decimal fraction soil group D = 0.000
RI index for soil(AMC 3)  =  61.36
Pervious area fraction =  0.100; Impervious fraction =  0.900
Initial subarea runoff =     18.747(CFS)
Total initial stream area =        5.367(Ac.)
Pervious area fraction = 0.100


++++++++++++++++++++++++++++++++++++++++++++++++++++++++++++++++++++++
Process from Point/Station       16.210 to Point/Station       16.220
**** PIPEFLOW TRAVEL TIME (Program estimated size) ****
______________________________________________________________________
Upstream point/station elevation =  2364.700(Ft.)
Downstream point/station elevation =  2354.700(Ft.)
Pipe length  =   580.70(Ft.)   Manning's N = 0.013
No. of pipes = 1  Required pipe flow  =    18.747(CFS)
Nearest computed pipe diameter  =     21.00(In.)
Calculated individual pipe flow  =    18.747(CFS)
Normal flow depth in pipe =   15.61(In.)
Flow top width inside pipe =   18.35(In.)
Critical Depth =   18.79(In.)
Pipe flow velocity =      9.79(Ft/s)
Travel time through pipe =    0.99 min.
Time of concentration (TC) =    10.35 min.
```

```
++++++++++++++++++++++++++++++++++++++++++++++++++++++++++++++++++++++
Process from Point/Station       16.220 to Point/Station       16.220
**** SUBAREA FLOW ADDITION ****
______________________________________________________________________
COMMERCIAL subarea type
Runoff Coefficient = 0.888
Decimal fraction soil group A = 0.370
Decimal fraction soil group B = 0.440
Decimal fraction soil group C = 0.000
Decimal fraction soil group D = 0.190
RI index for soil(AMC 3)  =  70.58
Pervious area fraction =  0.100; Impervious fraction =  0.900
Time of concentration =    10.35 min.
Rainfall intensity =      3.757(In/Hr) for a   100.0 year storm
Subarea runoff =     50.083(CFS) for     15.006(Ac.)
Total runoff =     68.830(CFS)  Total area =      20.373(Ac.)


++++++++++++++++++++++++++++++++++++++++++++++++++++++++++++++++++++++
Process from Point/Station       16.220 to Point/Station       16.230
**** PIPEFLOW TRAVEL TIME (Program estimated size) ****
______________________________________________________________________
Upstream point/station elevation =  2354.700(Ft.)
Downstream point/station elevation =  2353.000(Ft.)
Pipe length  =   338.10(Ft.)   Manning's N = 0.013
No. of pipes = 1  Required pipe flow  =    68.830(CFS)
Nearest computed pipe diameter  =     42.00(In.)
Calculated individual pipe flow  =    68.830(CFS)
Normal flow depth in pipe =   33.19(In.)
Flow top width inside pipe =   34.20(In.)
Critical Depth =   31.20(In.)
Pipe flow velocity =      8.45(Ft/s)
Travel time through pipe =    0.67 min.
Time of concentration (TC) =    11.01 min.


++++++++++++++++++++++++++++++++++++++++++++++++++++++++++++++++++++++
Process from Point/Station       16.220 to Point/Station       16.230
**** CONFLUENCE OF MINOR STREAMS ****
______________________________________________________________________
Along Main Stream number: 5 in normal stream number 1
Stream flow area =     20.373(Ac.)
Runoff from this stream =     68.830(CFS)
Time of concentration =   11.01 min.
Rainfall intensity =     3.641(In/Hr)


++++++++++++++++++++++++++++++++++++++++++++++++++++++++++++++++++++++
Process from Point/Station       16.240 to Point/Station       16.250
```

```
**** INITIAL AREA EVALUATION ****
______________________________________________________________________
Initial area flow distance =   585.600(Ft.)
Top (of initial area) elevation =  2380.000(Ft.)
Bottom (of initial area) elevation =  2370.000(Ft.)
Difference in elevation =    10.000(Ft.)
Slope =    0.01708  s(percent)=       1.71
TC = k(0.300)*[(length^3)/(elevation change)]^0.2
Initial area time of concentration =    8.663 min.
Rainfall intensity =      4.105(In/Hr) for a   100.0 year storm
COMMERCIAL subarea type
Runoff Coefficient = 0.880
Decimal fraction soil group A = 0.950
Decimal fraction soil group B = 0.050
Decimal fraction soil group C = 0.000
Decimal fraction soil group D = 0.000
RI index for soil(AMC 3)  =  53.20
Pervious area fraction =  0.100; Impervious fraction =  0.900
Initial subarea runoff =      1.203(CFS)
Total initial stream area =        0.333(Ac.)
Pervious area fraction = 0.100


++++++++++++++++++++++++++++++++++++++++++++++++++++++++++++++++++++++
Process from Point/Station       16.250 to Point/Station       16.260
**** STREET FLOW TRAVEL TIME + SUBAREA FLOW ADDITION ****
______________________________________________________________________
Top of street segment elevation =  2370.000(Ft.)
End of street segment elevation =  2363.100(Ft.)
Length of street segment  =  1120.000(Ft.)
Height of curb above gutter flowline  =    6.0(In.)
Width of half street (curb to crown)  =  20.000(Ft.)
Distance from crown to crossfall grade break  =  18.000(Ft.)
Slope from gutter to grade break (v/hz) =   0.065
Slope from grade break to crown (v/hz)  =   0.020
Street flow is on [1] side(s) of the street
Distance from curb to property line  =   2.000(Ft.)
Slope from curb to property line (v/hz) =   0.020
Gutter width =   2.000(Ft.)
Gutter hike from flowline =  2.000(In.)
 Manning's N in gutter =  0.0150
 Manning's N from gutter to grade break =  0.0150
 Manning's N from grade break to crown =  0.0150
Estimated mean flow rate at midpoint of street =      2.451(CFS)
Depth of flow =   0.345(Ft.), Average velocity =   1.860(Ft/s)
Streetflow hydraulics at midpoint of street travel:
Halfstreet flow width =  10.915(Ft.)
Flow velocity =   1.86(Ft/s)
Travel time =   10.04 min.     TC =   18.70  min.
 Adding area flow to street
```

```
COMMERCIAL subarea type
Runoff Coefficient = 0.881
Decimal fraction soil group A = 0.470
Decimal fraction soil group B = 0.530
Decimal fraction soil group C = 0.000
Decimal fraction soil group D = 0.000
RI index for soil(AMC 3)  =  64.72
Pervious area fraction =  0.100; Impervious fraction =  0.900
Rainfall intensity =      2.794(In/Hr) for a   100.0 year storm
Subarea runoff =      2.419(CFS) for      0.982(Ac.)
Total runoff =      3.622(CFS)  Total area =       1.315(Ac.)
Street flow at end of street =      3.622(CFS)
Half street flow at end of street =      3.622(CFS)
Depth of flow =   0.384(Ft.), Average velocity =   2.038(Ft/s)
Flow width (from curb towards crown)=  12.846(Ft.)


++++++++++++++++++++++++++++++++++++++++++++++++++++++++++++++++++++++
Process from Point/Station       16.260 to Point/Station       16.270
**** PIPEFLOW TRAVEL TIME (Program estimated size) ****
______________________________________________________________________
Upstream point/station elevation =  2355.400(Ft.)
Downstream point/station elevation =  2354.600(Ft.)
Pipe length  =    42.20(Ft.)   Manning's N = 0.013
No. of pipes = 1  Required pipe flow  =     3.622(CFS)
Nearest computed pipe diameter  =     12.00(In.)
Calculated individual pipe flow  =     3.622(CFS)
Normal flow depth in pipe =    7.67(In.)
Flow top width inside pipe =   11.53(In.)
Critical Depth =    9.74(In.)
Pipe flow velocity =      6.83(Ft/s)
Travel time through pipe =    0.10 min.
Time of concentration (TC) =    18.80 min.


++++++++++++++++++++++++++++++++++++++++++++++++++++++++++++++++++++++
Process from Point/Station       16.270 to Point/Station       16.270
**** SUBAREA FLOW ADDITION ****
______________________________________________________________________
COMMERCIAL subarea type
Runoff Coefficient = 0.882
Decimal fraction soil group A = 0.460
Decimal fraction soil group B = 0.540
Decimal fraction soil group C = 0.000
Decimal fraction soil group D = 0.000
RI index for soil(AMC 3)  =  64.96
Pervious area fraction =  0.100; Impervious fraction =  0.900
Time of concentration =    18.80 min.
Rainfall intensity =      2.787(In/Hr) for a   100.0 year storm
Subarea runoff =      2.100(CFS) for      0.855(Ac.)
```

```
Total runoff =      5.722(CFS)  Total area =       2.170(Ac.)


++++++++++++++++++++++++++++++++++++++++++++++++++++++++++++++++++++++
Process from Point/Station       16.270 to Point/Station       16.230
**** PIPEFLOW TRAVEL TIME (Program estimated size) ****
______________________________________________________________________
Upstream point/station elevation =  2354.600(Ft.)
Downstream point/station elevation =  2353.000(Ft.)
Pipe length  =    77.60(Ft.)   Manning's N = 0.013
No. of pipes = 1  Required pipe flow  =     5.722(CFS)
Nearest computed pipe diameter  =     15.00(In.)
Calculated individual pipe flow  =     5.722(CFS)
Normal flow depth in pipe =    8.52(In.)
Flow top width inside pipe =   14.86(In.)
Critical Depth =   11.61(In.)
Pipe flow velocity =      7.95(Ft/s)
Travel time through pipe =    0.16 min.
Time of concentration (TC) =    18.97 min.


++++++++++++++++++++++++++++++++++++++++++++++++++++++++++++++++++++++
Process from Point/Station       16.270 to Point/Station       16.230
**** CONFLUENCE OF MINOR STREAMS ****
______________________________________________________________________
Along Main Stream number: 5 in normal stream number 2
Stream flow area =      2.170(Ac.)
Runoff from this stream =      5.722(CFS)
Time of concentration =   18.97 min.
Rainfall intensity =     2.775(In/Hr)
Summary of stream data:

Stream   Flow rate      TC            Rainfall Intensity
 No.       (CFS)       (min)                 (In/Hr)


1       68.830     11.01                 3.641
2        5.722     18.97                 2.775
Largest stream flow has longer or shorter time of concentration
Qp =     68.830 + sum of
          Qa          Tb/Ta
           5.722 *    0.581 =      3.322
Qp =     72.153

Total of 2 streams to confluence:
Flow rates before confluence point:
      68.830       5.722
Area of streams before confluence:
       20.373        2.170
Results of confluence:
```

```
Total flow rate =     72.153(CFS)
Time of concentration =    11.013 min.
Effective stream area after confluence =     22.543(Ac.)


++++++++++++++++++++++++++++++++++++++++++++++++++++++++++++++++++++++
Process from Point/Station       16.230 to Point/Station       16.280
**** PIPEFLOW TRAVEL TIME (Program estimated size) ****
______________________________________________________________________
Upstream point/station elevation =  2353.000(Ft.)
Downstream point/station elevation =  2352.600(Ft.)
Pipe length  =   761.70(Ft.)   Manning's N = 0.013
No. of pipes = 1  Required pipe flow  =    72.153(CFS)
Nearest computed pipe diameter  =     63.00(In.)
Calculated individual pipe flow  =    72.153(CFS)
Normal flow depth in pipe =   56.25(In.)
Flow top width inside pipe =   38.97(In.)
Critical Depth =   28.37(In.)
Pipe flow velocity =      3.54(Ft/s)
Travel time through pipe =    3.59 min.
Time of concentration (TC) =    14.60 min.


++++++++++++++++++++++++++++++++++++++++++++++++++++++++++++++++++++++
Process from Point/Station       16.280 to Point/Station       16.280
**** SUBAREA FLOW ADDITION ****
______________________________________________________________________
COMMERCIAL subarea type
Runoff Coefficient = 0.884
Decimal fraction soil group A = 0.400
Decimal fraction soil group B = 0.600
Decimal fraction soil group C = 0.000
Decimal fraction soil group D = 0.000
RI index for soil(AMC 3)  =  66.40
Pervious area fraction =  0.100; Impervious fraction =  0.900
Time of concentration =    14.60 min.
Rainfall intensity =      3.162(In/Hr) for a   100.0 year storm
Subarea runoff =     23.731(CFS) for      8.487(Ac.)
Total runoff =     95.883(CFS)  Total area =      31.030(Ac.)


++++++++++++++++++++++++++++++++++++++++++++++++++++++++++++++++++++++
Process from Point/Station       16.280 to Point/Station       16.110
**** PIPEFLOW TRAVEL TIME (Program estimated size) ****
______________________________________________________________________
Upstream point/station elevation =  2352.600(Ft.)
Downstream point/station elevation =  2350.000(Ft.)
Pipe length  =   449.00(Ft.)   Manning's N = 0.013
No. of pipes = 1  Required pipe flow  =    95.883(CFS)
Nearest computed pipe diameter  =     45.00(In.)
```

```
Calculated individual pipe flow  =    95.883(CFS)
Normal flow depth in pipe =   38.81(In.)
Flow top width inside pipe =   30.99(In.)
Critical Depth =   36.07(In.)
Pipe flow velocity =      9.46(Ft/s)
Travel time through pipe =    0.79 min.
Time of concentration (TC) =    15.39 min.


++++++++++++++++++++++++++++++++++++++++++++++++++++++++++++++++++++++
Process from Point/Station       16.280 to Point/Station       16.110
**** CONFLUENCE OF MAIN STREAMS ****
______________________________________________________________________
The following data inside Main Stream is listed:
In Main Stream number: 5
Stream flow area =     31.030(Ac.)
Runoff from this stream =     95.883(CFS)
Time of concentration =   15.39 min.
Rainfall intensity =     3.080(In/Hr)
Summary of stream data:

Stream   Flow rate      TC            Rainfall Intensity
 No.       (CFS)       (min)                 (In/Hr)


1       98.385     23.80                 2.477
2       16.933     24.55                 2.439
3        5.462      7.34                 4.459
4       10.857      8.21                 4.218
5       95.883     15.39                 3.080
Largest stream flow has longer or shorter time of concentration
Qp =     98.385 + sum of
          Qa          Tb/Ta
          16.933 *    0.969 =     16.411
          Qb         Ia/Ib
           5.462 *    0.555 =      3.034
          Qb         Ia/Ib
          10.857 *    0.587 =      6.376
          Qb         Ia/Ib
          95.883 *    0.804 =     77.110
Qp =    201.317

Total of 5 main streams to confluence:
Flow rates before confluence point:
      98.385      16.933       5.462      10.857      95.883
Area of streams before confluence:
       42.743        7.560        1.377        2.895       31.030


Results of confluence:
```

```
Total flow rate =    201.317(CFS)
Time of concentration =    23.798 min.
Effective stream area after confluence  =     85.605(Ac.)


++++++++++++++++++++++++++++++++++++++++++++++++++++++++++++++++++++++
Process from Point/Station       16.110 to Point/Station       16.290
**** PIPEFLOW TRAVEL TIME (Program estimated size) ****
______________________________________________________________________
Upstream point/station elevation =  2345.000(Ft.)
Downstream point/station elevation =  2310.000(Ft.)
Pipe length  =  1962.50(Ft.)   Manning's N = 0.013
No. of pipes = 1  Required pipe flow  =   201.317(CFS)
Nearest computed pipe diameter  =     48.00(In.)
Calculated individual pipe flow  =   201.317(CFS)
Normal flow depth in pipe =   41.91(In.)
Flow top width inside pipe =   31.96(In.)
Critical depth could not be calculated.
Pipe flow velocity =     17.29(Ft/s)
Travel time through pipe =    1.89 min.
Time of concentration (TC) =    25.69 min.


++++++++++++++++++++++++++++++++++++++++++++++++++++++++++++++++++++++
Process from Point/Station       16.110 to Point/Station       16.290
**** CONFLUENCE OF MAIN STREAMS ****
______________________________________________________________________
The following data inside Main Stream is listed:
In Main Stream number: 1
Stream flow area =     85.605(Ac.)
Runoff from this stream =    201.317(CFS)
Time of concentration =   25.69 min.
Rainfall intensity =     2.384(In/Hr)
Program is now starting with Main Stream No. 2


++++++++++++++++++++++++++++++++++++++++++++++++++++++++++++++++++++++
Process from Point/Station       16.300 to Point/Station       16.310
**** INITIAL AREA EVALUATION ****
______________________________________________________________________
Initial area flow distance =   635.400(Ft.)
Top (of initial area) elevation =  2510.000(Ft.)
Bottom (of initial area) elevation =  2420.000(Ft.)
Difference in elevation =    90.000(Ft.)
Slope =    0.14164  s(percent)=      14.16
TC = k(0.480)*[(length^3)/(elevation change)]^0.2
Initial area time of concentration =    9.380 min.
Rainfall intensity =      3.945(In/Hr) for a   100.0 year storm
SINGLE FAMILY (1 Acre Lot)
Runoff Coefficient = 0.842
```

```
Decimal fraction soil group A = 0.070
Decimal fraction soil group B = 0.540
Decimal fraction soil group C = 0.000
Decimal fraction soil group D = 0.390
RI index for soil(AMC 3)  =  79.38
Pervious area fraction =  0.800; Impervious fraction =  0.200
Initial subarea runoff =      9.942(CFS)
Total initial stream area =        2.993(Ac.)
Pervious area fraction = 0.800


++++++++++++++++++++++++++++++++++++++++++++++++++++++++++++++++++++++
Process from Point/Station       16.310 to Point/Station       16.320
**** NATURAL CHANNEL TIME + SUBAREA FLOW ADDITION ****
______________________________________________________________________
Top of natural channel elevation =   2420.000(Ft.)
End of natural channel elevation =   2396.700(Ft.)
Length of natural channel  =   552.000(Ft.)
Estimated mean flow rate at midpoint of channel =     30.755(CFS)

Natural valley channel type used
L.A. County flood control district formula for channel velocity:
 Velocity(ft/s) = (7 + 8(q(English Units)^.352)(slope^0.5)
Velocity using mean channel flow =   6.93(Ft/s)

Correction to map slope used on extremely rugged channels with
drops and waterfalls (Plate D-6.2)
        Normal channel slope =  0.0422
Corrected/adjusted channel slope =  0.0422
Travel time =    1.33 min.     TC =   10.71  min.


 Adding area flow to channel
SINGLE FAMILY (1 Acre Lot)
Runoff Coefficient = 0.804
Decimal fraction soil group A = 0.260
Decimal fraction soil group B = 0.720
Decimal fraction soil group C = 0.000
Decimal fraction soil group D = 0.020
RI index for soil(AMC 3)  =  70.11
Pervious area fraction =  0.800; Impervious fraction =  0.200
Rainfall intensity =      3.693(In/Hr) for a   100.0 year storm
Subarea runoff =     37.204(CFS) for     12.532(Ac.)
Total runoff =     47.146(CFS)  Total area =      15.525(Ac.)


++++++++++++++++++++++++++++++++++++++++++++++++++++++++++++++++++++++
Process from Point/Station       16.320 to Point/Station       16.330
**** PIPEFLOW TRAVEL TIME (Program estimated size) ****
______________________________________________________________________
```

```
Upstream point/station elevation =  2396.700(Ft.)
Downstream point/station elevation =  2359.100(Ft.)
Pipe length  =  1340.70(Ft.)   Manning's N = 0.013
No. of pipes = 1  Required pipe flow  =    47.146(CFS)
Nearest computed pipe diameter  =     27.00(In.)
Calculated individual pipe flow  =    47.146(CFS)
Normal flow depth in pipe =   20.20(In.)
Flow top width inside pipe =   23.44(In.)
Critical depth could not be calculated.
Pipe flow velocity =     14.78(Ft/s)
Travel time through pipe =    1.51 min.
Time of concentration (TC) =    12.22 min.


++++++++++++++++++++++++++++++++++++++++++++++++++++++++++++++++++++++
Process from Point/Station       16.330 to Point/Station       16.330
**** SUBAREA FLOW ADDITION ****
______________________________________________________________________
COMMERCIAL subarea type
Runoff Coefficient = 0.885
Decimal fraction soil group A = 0.400
Decimal fraction soil group B = 0.600
Decimal fraction soil group C = 0.000
Decimal fraction soil group D = 0.000
RI index for soil(AMC 3)  =  66.40
Pervious area fraction =  0.100; Impervious fraction =  0.900
Time of concentration =    12.22 min.
Rainfall intensity =      3.457(In/Hr) for a   100.0 year storm
Subarea runoff =     64.231(CFS) for     20.989(Ac.)
Total runoff =    111.377(CFS)  Total area =      36.514(Ac.)


++++++++++++++++++++++++++++++++++++++++++++++++++++++++++++++++++++++
Process from Point/Station       16.330 to Point/Station       16.340
**** PIPEFLOW TRAVEL TIME (Program estimated size) ****
______________________________________________________________________
Upstream point/station elevation =  2359.100(Ft.)
Downstream point/station elevation =  2336.000(Ft.)
Pipe length  =   488.80(Ft.)   Manning's N = 0.013
No. of pipes = 1  Required pipe flow  =   111.377(CFS)
Nearest computed pipe diameter  =     33.00(In.)
Calculated individual pipe flow  =   111.377(CFS)
Normal flow depth in pipe =   26.16(In.)
Flow top width inside pipe =   26.76(In.)
Critical depth could not be calculated.
Pipe flow velocity =     22.05(Ft/s)
Travel time through pipe =    0.37 min.
Time of concentration (TC) =    12.59 min.
```

```
++++++++++++++++++++++++++++++++++++++++++++++++++++++++++++++++++++++
Process from Point/Station       16.330 to Point/Station       16.340
**** CONFLUENCE OF MINOR STREAMS ****
______________________________________________________________________
Along Main Stream number: 2 in normal stream number 1
Stream flow area =     36.514(Ac.)
Runoff from this stream =    111.377(CFS)
Time of concentration =   12.59 min.
Rainfall intensity =     3.406(In/Hr)


++++++++++++++++++++++++++++++++++++++++++++++++++++++++++++++++++++++
Process from Point/Station       16.350 to Point/Station       16.360
**** INITIAL AREA EVALUATION ****
______________________________________________________________________
Initial area flow distance =   384.900(Ft.)
Top (of initial area) elevation =  2415.900(Ft.)
Bottom (of initial area) elevation =  2402.500(Ft.)
Difference in elevation =    13.400(Ft.)
Slope =    0.03481  s(percent)=       3.48
TC = k(0.300)*[(length^3)/(elevation change)]^0.2
Initial area time of concentration =    6.352 min.
Rainfall intensity =      4.795(In/Hr) for a   100.0 year storm
COMMERCIAL subarea type
Runoff Coefficient = 0.890
Decimal fraction soil group A = 0.370
Decimal fraction soil group B = 0.570
Decimal fraction soil group C = 0.000
Decimal fraction soil group D = 0.060
RI index for soil(AMC 3)  =  68.26
Pervious area fraction =  0.100; Impervious fraction =  0.900
Initial subarea runoff =      2.734(CFS)
Total initial stream area =        0.641(Ac.)
Pervious area fraction = 0.100


++++++++++++++++++++++++++++++++++++++++++++++++++++++++++++++++++++++
Process from Point/Station       16.360 to Point/Station       16.370
**** STREET FLOW TRAVEL TIME + SUBAREA FLOW ADDITION ****
______________________________________________________________________
Top of street segment elevation =  2402.500(Ft.)
End of street segment elevation =  2345.000(Ft.)
Length of street segment  =  1271.800(Ft.)
Height of curb above gutter flowline  =    6.0(In.)
Width of half street (curb to crown)  =  25.000(Ft.)
Distance from crown to crossfall grade break  =  23.000(Ft.)
Slope from gutter to grade break (v/hz) =   0.065
Slope from grade break to crown (v/hz)  =   0.020
Street flow is on [1] side(s) of the street
Distance from curb to property line  =   2.000(Ft.)
```

```
Slope from curb to property line (v/hz) =   0.020
Gutter width =   2.000(Ft.)
Gutter hike from flowline =  2.000(In.)
 Manning's N in gutter =  0.0150
 Manning's N from gutter to grade break =  0.0150
 Manning's N from grade break to crown =  0.0150
Estimated mean flow rate at midpoint of street =      4.323(CFS)
Depth of flow =   0.308(Ft.), Average velocity =   4.568(Ft/s)
Streetflow hydraulics at midpoint of street travel:
Halfstreet flow width =   9.054(Ft.)
Flow velocity =   4.57(Ft/s)
Travel time =    4.64 min.     TC =   10.99  min.
 Adding area flow to street
COMMERCIAL subarea type
Runoff Coefficient = 0.890
Decimal fraction soil group A = 0.030
Decimal fraction soil group B = 0.970
Decimal fraction soil group C = 0.000
Decimal fraction soil group D = 0.000
RI index for soil(AMC 3)  =  74.22
Pervious area fraction =  0.100; Impervious fraction =  0.900
Rainfall intensity =      3.645(In/Hr) for a   100.0 year storm
Subarea runoff =      3.114(CFS) for      0.960(Ac.)
Total runoff =      5.848(CFS)  Total area =       1.601(Ac.)
Street flow at end of street =      5.848(CFS)
Half street flow at end of street =      5.848(CFS)
Depth of flow =   0.333(Ft.), Average velocity =   4.892(Ft/s)
Flow width (from curb towards crown)=  10.338(Ft.)


++++++++++++++++++++++++++++++++++++++++++++++++++++++++++++++++++++++
Process from Point/Station       16.370 to Point/Station       16.370
**** SUBAREA FLOW ADDITION ****
______________________________________________________________________
COMMERCIAL subarea type
Runoff Coefficient = 0.887
Decimal fraction soil group A = 0.290
Decimal fraction soil group B = 0.710
Decimal fraction soil group C = 0.000
Decimal fraction soil group D = 0.000
RI index for soil(AMC 3)  =  69.04
Pervious area fraction =  0.100; Impervious fraction =  0.900
Time of concentration =    10.99 min.
Rainfall intensity =      3.645(In/Hr) for a   100.0 year storm
Subarea runoff =     11.520(CFS) for      3.562(Ac.)
Total runoff =     17.367(CFS)  Total area =       5.163(Ac.)


++++++++++++++++++++++++++++++++++++++++++++++++++++++++++++++++++++++
Process from Point/Station       16.370 to Point/Station       16.371
```

```
**** PIPEFLOW TRAVEL TIME (Program estimated size) ****
_______________________________________________________________________
Upstream point/station elevation =  2341.000(Ft.)
Downstream point/station elevation =  2340.000(Ft.)
Pipe length  =    29.50(Ft.)   Manning's N = 0.013
No. of pipes = 1  Required pipe flow  =    17.367(CFS)
Nearest computed pipe diameter  =     18.00(In.)
Calculated individual pipe flow  =    17.367(CFS)
Normal flow depth in pipe =   13.34(In.)
Flow top width inside pipe =   15.77(In.)
Critical depth could not be calculated.
Pipe flow velocity =     12.38(Ft/s)
Travel time through pipe =    0.04 min.
Time of concentration (TC) =    11.03 min.


++++++++++++++++++++++++++++++++++++++++++++++++++++++++++++++++++++++
Process from Point/Station       16.371 to Point/Station       16.372
**** NATURAL CHANNEL TIME + SUBAREA FLOW ADDITION ****
_______________________________________________________________________
Top of natural channel elevation =   2340.000(Ft.)
End of natural channel elevation =   2339.500(Ft.)
Length of natural channel  =    70.600(Ft.)
Estimated mean flow rate at midpoint of channel =     19.152(CFS)

Natural valley channel type used
L.A. County flood control district formula for channel velocity:
 Velocity(ft/s) = (7 + 8(q(English Units)^.352)(slope^0.5)
Velocity using mean channel flow =   2.49(Ft/s)

Correction to map slope used on extremely rugged channels with
drops and waterfalls (Plate D-6.2)
        Normal channel slope =  0.0071
Corrected/adjusted channel slope =  0.0071
Travel time =    0.47 min.     TC =   11.50  min.


 Adding area flow to channel
UNDEVELOPED (good cover) subarea
Runoff Coefficient = 0.708
Decimal fraction soil group A = 1.000
Decimal fraction soil group B = 0.000
Decimal fraction soil group C = 0.000
Decimal fraction soil group D = 0.000
RI index for soil(AMC 3)  =  58.00
Pervious area fraction =  1.000; Impervious fraction =  0.000
Rainfall intensity =      3.563(In/Hr) for a   100.0 year storm
Subarea runoff =      2.677(CFS) for      1.061(Ac.)
Total runoff =     20.044(CFS)  Total area =       6.224(Ac.)
```

```
++++++++++++++++++++++++++++++++++++++++++++++++++++++++++++++++++++++
Process from Point/Station       16.372 to Point/Station       16.340
**** PIPEFLOW TRAVEL TIME (Program estimated size) ****
______________________________________________________________________
Upstream point/station elevation =  2337.000(Ft.)
Downstream point/station elevation =  2336.000(Ft.)
Pipe length  =    72.70(Ft.)   Manning's N = 0.013
No. of pipes = 1  Required pipe flow  =    20.044(CFS)
Nearest computed pipe diameter  =     24.00(In.)
Calculated individual pipe flow  =    20.044(CFS)
Normal flow depth in pipe =   15.59(In.)
Flow top width inside pipe =   22.90(In.)
Critical Depth =   19.29(In.)
Pipe flow velocity =      9.28(Ft/s)
Travel time through pipe =    0.13 min.
Time of concentration (TC) =    11.63 min.


++++++++++++++++++++++++++++++++++++++++++++++++++++++++++++++++++++++
Process from Point/Station       16.372 to Point/Station       16.340
**** CONFLUENCE OF MINOR STREAMS ****
______________________________________________________________________
Along Main Stream number: 2 in normal stream number 2
Stream flow area =      6.224(Ac.)
Runoff from this stream =     20.044(CFS)
Time of concentration =   11.63 min.
Rainfall intensity =     3.543(In/Hr)


++++++++++++++++++++++++++++++++++++++++++++++++++++++++++++++++++++++
Process from Point/Station       16.380 to Point/Station       16.390
**** INITIAL AREA EVALUATION ****
______________________________________________________________________
Initial area flow distance =   364.100(Ft.)
Top (of initial area) elevation =  2376.200(Ft.)
Bottom (of initial area) elevation =  2371.500(Ft.)
Difference in elevation =     4.700(Ft.)
Slope =    0.01291  s(percent)=       1.29
TC = k(0.300)*[(length^3)/(elevation change)]^0.2
Initial area time of concentration =    7.576 min.
Rainfall intensity =      4.390(In/Hr) for a   100.0 year storm
COMMERCIAL subarea type
Runoff Coefficient = 0.882
Decimal fraction soil group A = 0.900
Decimal fraction soil group B = 0.100
Decimal fraction soil group C = 0.000
Decimal fraction soil group D = 0.000
RI index for soil(AMC 3)  =  54.40
Pervious area fraction =  0.100; Impervious fraction =  0.900
```

```
Initial subarea runoff =      8.249(CFS)
Total initial stream area =        2.131(Ac.)
Pervious area fraction = 0.100


++++++++++++++++++++++++++++++++++++++++++++++++++++++++++++++++++++++
Process from Point/Station       16.390 to Point/Station       16.340
**** PIPEFLOW TRAVEL TIME (Program estimated size) ****
______________________________________________________________________
Upstream point/station elevation =  2366.500(Ft.)
Downstream point/station elevation =  2336.000(Ft.)
Pipe length  =    91.30(Ft.)   Manning's N = 0.013
No. of pipes = 1  Required pipe flow  =     8.249(CFS)
Nearest computed pipe diameter  =      9.00(In.)
Calculated individual pipe flow  =     8.249(CFS)
Normal flow depth in pipe =    6.45(In.)
Flow top width inside pipe =    8.12(In.)
Critical depth could not be calculated.
Pipe flow velocity =     24.35(Ft/s)
Travel time through pipe =    0.06 min.
Time of concentration (TC) =     7.64 min.


++++++++++++++++++++++++++++++++++++++++++++++++++++++++++++++++++++++
Process from Point/Station       16.390 to Point/Station       16.340
**** CONFLUENCE OF MINOR STREAMS ****
______________________________________________________________________
Along Main Stream number: 2 in normal stream number 3
Stream flow area =      2.131(Ac.)
Runoff from this stream =      8.249(CFS)
Time of concentration =    7.64 min.
Rainfall intensity =     4.372(In/Hr)
Summary of stream data:

Stream   Flow rate      TC            Rainfall Intensity
 No.       (CFS)       (min)                 (In/Hr)


1      111.377     12.59                 3.406
2       20.044     11.63                 3.543
3        8.249      7.64                 4.372
Largest stream flow has longer time of concentration
Qp =    111.377 + sum of
          Qb         Ia/Ib
          20.044 *    0.961 =     19.269
          Qb         Ia/Ib
           8.249 *    0.779 =      6.425
Qp =    137.071

Total of 3 streams to confluence:
```

```
Flow rates before confluence point:
     111.377      20.044       8.249
Area of streams before confluence:
       36.514        6.224        2.131
Results of confluence:
Total flow rate =    137.071(CFS)
Time of concentration =    12.590 min.
Effective stream area after confluence =     44.869(Ac.)


++++++++++++++++++++++++++++++++++++++++++++++++++++++++++++++++++++++
Process from Point/Station       16.340 to Point/Station       16.290
**** PIPEFLOW TRAVEL TIME (Program estimated size) ****
______________________________________________________________________
Upstream point/station elevation =  2336.000(Ft.)
Downstream point/station elevation =  2310.000(Ft.)
Pipe length  =   482.30(Ft.)   Manning's N = 0.013
No. of pipes = 1  Required pipe flow  =   137.071(CFS)
Nearest computed pipe diameter  =     36.00(In.)
Calculated individual pipe flow  =   137.071(CFS)
Normal flow depth in pipe =   26.34(In.)
Flow top width inside pipe =   31.90(In.)
Critical depth could not be calculated.
Pipe flow velocity =     24.74(Ft/s)
Travel time through pipe =    0.32 min.
Time of concentration (TC) =    12.91 min.


++++++++++++++++++++++++++++++++++++++++++++++++++++++++++++++++++++++
Process from Point/Station       16.340 to Point/Station       16.290
**** CONFLUENCE OF MAIN STREAMS ****
______________________________________________________________________
The following data inside Main Stream is listed:
In Main Stream number: 2
Stream flow area =     44.869(Ac.)
Runoff from this stream =    137.071(CFS)
Time of concentration =   12.91 min.
Rainfall intensity =     3.362(In/Hr)
Summary of stream data:

Stream   Flow rate      TC            Rainfall Intensity
 No.       (CFS)       (min)                 (In/Hr)


1      201.317     25.69                 2.384
2      137.071     12.91                 3.362
Largest stream flow has longer time of concentration
Qp =    201.317 + sum of
          Qb         Ia/Ib
         137.071 *    0.709 =     97.187
```

```
Qp =    298.504

Total of 2 main streams to confluence:
Flow rates before confluence point:
     201.317     137.071
Area of streams before confluence:
       85.605       44.869


Results of confluence:
Total flow rate =    298.504(CFS)
Time of concentration =    25.689 min.
Effective stream area after confluence  =    130.474(Ac.)


++++++++++++++++++++++++++++++++++++++++++++++++++++++++++++++++++++++
Process from Point/Station       16.290 to Point/Station       16.420
**** NATURAL CHANNEL TIME + SUBAREA FLOW ADDITION ****
______________________________________________________________________
Top of natural channel elevation =   2310.000(Ft.)
End of natural channel elevation =   2301.500(Ft.)
Length of natural channel  =   252.000(Ft.)
Estimated mean flow rate at midpoint of channel =    306.303(CFS)

Natural valley channel type used
L.A. County flood control district formula for channel velocity:
 Velocity(ft/s) = (7 + 8(q(English Units)^.352)(slope^0.5)
Velocity using mean channel flow =  12.31(Ft/s)

Correction to map slope used on extremely rugged channels with
drops and waterfalls (Plate D-6.2)
        Normal channel slope =  0.0337
Corrected/adjusted channel slope =  0.0337
Travel time =    0.34 min.     TC =   26.03  min.


 Adding area flow to channel
UNDEVELOPED (poor cover) subarea
Runoff Coefficient = 0.816
Decimal fraction soil group A = 0.790
Decimal fraction soil group B = 0.210
Decimal fraction soil group C = 0.000
Decimal fraction soil group D = 0.000
RI index for soil(AMC 3)  =  84.59
Pervious area fraction =  1.000; Impervious fraction =  0.000
Rainfall intensity =      2.368(In/Hr) for a   100.0 year storm
Subarea runoff =     13.181(CFS) for      6.818(Ac.)
Total runoff =    311.685(CFS)  Total area =     137.292(Ac.)
```

```
++++++++++++++++++++++++++++++++++++++++++++++++++++++++++++++++++++++
Process from Point/Station       16.420 to Point/Station       16.430
**** PIPEFLOW TRAVEL TIME (Program estimated size) ****
______________________________________________________________________
Upstream point/station elevation =  2301.500(Ft.)
Downstream point/station elevation =  2295.200(Ft.)
Pipe length  =   184.90(Ft.)   Manning's N = 0.013
No. of pipes = 2  Required pipe flow  =   311.685(CFS)
Nearest computed pipe diameter  =     39.00(In.)
Calculated individual pipe flow  =   155.842(CFS)
Normal flow depth in pipe =   32.81(In.)
Flow top width inside pipe =   28.50(In.)
Critical depth could not be calculated.
Pipe flow velocity =     20.92(Ft/s)
Travel time through pipe =    0.15 min.
Time of concentration (TC) =    26.18 min.
End of computations, total study area =          137.29 (Ac.)
The following figures may
be used for a unit hydrograph study of the same area.

Area averaged pervious area fraction(Ap) = 0.303
Area averaged RI index number =  52.1
```

Existing Culvert Hydraulic Analysis ..... D

Joseph E. Bonadiman & Assoc., Inc.
Consulting Engineers
234 N. Arrowhead Ave.
San Bernardino, California 92408
(909)885-3806

CULVERT 3

```
Inside Diameter
  ( 30.00 in.)

          *
      *       *
    *           *

  *               *_ _ _ _
  ^^^
```

Joseph E. Bonadiman & Assoc., Inc.
Consulting Engineers
234 N. Arrowhead Ave.
San Bernardino, California 92408
(909)885-3806

CULVERT 4

```
Inside Diameter
  ( 36.00 in.)

          *
      *           *
    *               *

  *                   *_ _ _ _
  ^^^
```

Joseph E. Bonadiman & Assoc., Inc.
Consulting Engineers
234 N. Arrowhead Ave.
San Bernardino, California 92408
(909)885-3806

CULVERT 5

```
Inside Diameter
  ( 30.00 in.)

          *
      *       *
    *           *

  *               *_ _ _ _
  ^^^
```

Joseph E. Bonadiman & Assoc., Inc.
Consulting Engineers
234 N. Arrowhead Ave.
San Bernardino, California 92408
(909)885-3806

CULVERT 6

```
Inside Diameter
  ( 42.00 in.)

          *
      *           *
    *               *

  *                   *_ _ _ _
  ^^^
```

Joseph E. Bonadiman & Assoc., Inc.
Consulting Engineers
234 N. Arrowhead Ave.
San Bernardino, California 92408
(909)885-3806

CULVERT 7

```
Inside Diameter
  ( 24.00 in.)

          *
      *       *
    *           *

  *               *_ _ _ _
  ^^^
```

Joseph E. Bonadiman & Assoc., Inc.
Consulting Engineers
234 N. Arrowhead Ave.
San Bernardino, California 92408
(909)885-3806

CULVERT 8

```
Inside Diameter
  ( 24.00 in.)

          *
      *       *
    *           *

  *               *_ _ _ _
  ^^^
```

Joseph E. Bonadiman & Assoc., Inc.
Consulting Engineers
234 N. Arrowhead Ave.
San Bernardino, California 92408
(909)885-3806

CULVERT 9

```
Inside Diameter
  ( 24.00 in.)

          *
      *       *
    *           *

  *               *_ _ _ _
  ^^^
```

Joseph E. Bonadiman & Assoc., Inc.
Consulting Engineers
234 N. Arrowhead Ave.
San Bernardino, California 92408
(909)885-3806

CULVERT 10

```
Inside Diameter
  ( 24.00 in.)

          *
      *       *
    *           *

  *               *_ _ _ _
  ^^^
```

Joseph E. Bonadiman & Assoc., Inc.
Consulting Engineers
234 N. Arrowhead Ave.
San Bernardino, California 92408
(909)885-3806

CULVERT 11

```
Inside Diameter
  ( 48.00 in.)

          *
     *          *
   *              *

 *                  *_ _ _ _
 ^^^
```

Joseph E. Bonadiman & Assoc., Inc.
Consulting Engineers
234 N. Arrowhead Ave.
San Bernardino, California 92408
(909)885-3806

CULVERT 12

```
Inside Diameter
  ( 24.00 in.)

          *
      *       *
    *           *

  *               *_ _ _ _
  ^^^
```

Joseph E. Bonadiman & Assoc., Inc.
Consulting Engineers
234 N. Arrowhead Ave.
San Bernardino, California 92408
(909)885-3806

CULVERT 13

```
Inside Diameter
  ( 36.00 in.)

          *
      *       *
    *           *

  *               *_ _ _ _
  ^^^
```

Joseph E. Bonadiman & Assoc., Inc.
Consulting Engineers
234 N. Arrowhead Ave.
San Bernardino, California 92408
(909)885-3806

CULVERT 14

```
Inside Diameter
  ( 36.00 in.)

          *
      *       *
    *           *

  *               *_ _ _ _
  ^^^
```

Joseph E. Bonadiman & Assoc., Inc.
Consulting Engineers
234 N. Arrowhead Ave.
San Bernardino, California 92408
(909)885-3806

CULVERT 15

```
Inside Diameter
  ( 36.00 in.)

          *
      *           *
    *               *

  *                   *_ _ _ _
  ^^^
```

Joseph E. Bonadiman & Assoc., Inc.
Consulting Engineers
234 N. Arrowhead Ave.
San Bernardino, California 92408
(909)885-3806

CULVERT 16

```
Inside Diameter
  ( 48.00 in.)

          *
      *           *
    *               *

  *                   *_ _ _ _
  ^^^
```

Developed Unit Hydrograph.....E

U n i t H y d r o g r a p h A n a l y s i s

Copyright (c) CIVILCADD/CIVILDESIGN, 1989 - 2008, Version 8.1
Study date 02/23/23 File: Area011100.out

++

Riverside County Synthetic Unit Hydrology Method
RCFC & WCD Manual date - April 1978

Program License Serial Number 6094

English (in-lb) Input Units Used
English Rainfall Data (Inches) Input Values Used

English Units used in output format

JACKRABBIT TRAIL
DEVELOPED UNIT HYDROGRAPH ANALYSIS
AREA 1
100-YEAR

Drainage Area = 54.80(Ac.) = 0.086 Sq. Mi.
Drainage Area for Depth-Area Areal Adjustment = 54.80(Ac.) = 0.086 Sq. Mi.
Length along longest watercourse = 2544.00(Ft.)
Length along longest watercourse measured to centroid = 1672.10(Ft.)
Length along longest watercourse = 0.482 Mi.
Length along longest watercourse measured to centroid = 0.317 Mi.
Difference in elevation = 18.00(Ft.)
Slope along watercourse = 37.3585 Ft./Mi.
Average Manning's 'N' = 0.015
Lag time = 0.089 Hr.
Lag time = 5.31 Min.
25% of lag time = 1.33 Min.
40% of lag time = 2.13 Min.
Unit time = 5.00 Min.
Duration of storm = 1 Hour(s)
User Entered Base Flow = 0.00(CFS)

2 YEAR Area rainfall data:

```
Area(Ac.)[1]       Rainfall(In)[2]      Weighting[1*2]
       54.80            0.55                   30.19

100 YEAR Area rainfall data:


Area(Ac.)[1]       Rainfall(In)[2]      Weighting[1*2]
       54.80            1.56                   85.49

STORM EVENT (YEAR) =  100.00
Area Averaged 2-Year Rainfall =    0.551(In)
Area Averaged 100-Year Rainfall =    1.560(In)

Point rain (area averaged) =    1.560(In)
Areal adjustment factor =   99.95 %
Adjusted average point rain =    1.559(In)

Sub-Area Data:
Area(Ac.)         Runoff Index   Impervious %
    54.800           69.20         0.344
 Total Area Entered =     54.80(Ac.)


RI    RI   Infil. Rate Impervious   Adj. Infil. Rate  Area%     F
AMC2 AMC-3     (In/Hr)    (Dec.%)     (In/Hr)      (Dec.)    (In/Hr)
69.2  84.5      0.192     0.344        0.133       1.000      0.133
                                                  Sum (F) =   0.133
Area averaged mean soil loss (F) (In/Hr) =  0.133
Minimum soil loss rate ((In/Hr)) =  0.066
(for 24 hour storm duration)
Soil low loss rate (decimal) =   0.625
---------------------------------------------------------------------
Slope of intensity-duration curve for a 1 hour storm =0.5300
----------------------------------------------------------------------

                U n i t  H y d r o g r a p h
                        FOOTHILL S-Curve
--------------------------------------------------------------------
                Unit Hydrograph Data
---------------------------------------------------------------------
Unit time period   Time % of lag   Distribution   Unit Hydrograph
    (hrs)                           Graph %            (CFS)
---------------------------------------------------------------------
    1   0.083         94.088         12.433              6.866
    2   0.167        188.177         54.787             30.258
    3   0.250        282.265         19.667             10.862
    4   0.333        376.353          8.109              4.478
    5   0.417        470.442          3.134              1.731
    6   0.500        564.530          0.960              0.530
    7   0.583        658.618          0.630              0.348
    8   0.667        752.707          0.281              0.155
                                Sum = 100.000   Sum=      55.228
--------------------------------------------------------------------
```

The following loss rate calculations reflect use of the minimum calculated loss
rate subtracted from the Storm Rain to produce the maximum Effective Rain value

Unit	Time (Hr.)	Pattern Percent	Storm Rain (In/Hr)	Loss rate(In./Hr) Max	Low	Effective (In/Hr)
1	0.08	3.40	0.636	0.133	(0.398)	0.503
2	0.17	4.70	0.879	0.133	(0.550)	0.747
3	0.25	4.70	0.879	0.133	(0.550)	0.747
4	0.33	5.10	0.954	0.133	(0.596)	0.821
5	0.42	5.80	1.085	0.133	(0.678)	0.952
6	0.50	5.90	1.104	0.133	(0.690)	0.971
7	0.58	7.10	1.328	0.133	(0.830)	1.196
8	0.67	8.70	1.628	0.133	(1.017)	1.495
9	0.75	13.20	2.470	0.133	(1.544)	2.337
10	0.83	29.70	5.557	0.133	(3.473)	5.424
11	0.92	7.70	1.441	0.133	(0.900)	1.308
12	1.00	4.00	0.748	0.133	(0.468)	0.616
			(Loss Rate Not Used)			
Sum =		100.0			Sum =	17.1

Flood volume = Effective rainfall 1.43(In)
times area 54.8(Ac.)/[(In)/(Ft.)] = 6.5(Ac.Ft)
Total soil loss = 0.13(In)
Total soil loss = 0.607(Ac.Ft)
Total rainfall = 1.56(In)
Flood volume = 283733.8 Cubic Feet
Total soil loss = 26433.6 Cubic Feet

Peak flow rate of this hydrograph = 208.332(CFS)

++

1 - H O U R S T O R M
R u n o f f H y d r o g r a p h

Hydrograph in 5 Minute intervals ((CFS))

```
Time(h+m) Volume Ac.Ft   Q(CFS)  0       75.0     150.0     225.0     300.0
-----------------------------------------------------------------------
  0+ 5       0.0238      3.46  Q         |         |         |         |
  0+10       0.1641     20.36  |VQ       |         |         |         |
  0+15       0.3927     33.20  | V Q     |         |         |         |
  0+20       0.6586     38.61  |   VQ    |         |         |         |
  0+25       0.9598     43.74  |    Q    |         |         |         |
  0+30       1.2996     49.33  |     QV  |         |         |         |
  0+35       1.6681     53.50  |      Q  V         |         |         |
  0+40       2.1050     63.44  |       Q | V       |         |         |
  0+45       2.6636     81.12  |         Q     V   |         |         |
  0+50       3.5741    132.20  |         |      Q  |V        |         |
  0+55       5.0089    208.33  |         |         |      Q  V         |
  1+ 0       5.8143    116.95  |         |    Q    |         |    V    |
  1+ 5       6.2452     62.56  |       Q |         |         |       V |
```

```
    1+10       6.4097     23.89  |  Q      |         |         |        V|
    1+15       6.4713      8.95  |Q        |         |         |        V|
    1+20       6.4989      4.01  Q         |         |         |        V|
    1+25       6.5101      1.62  Q         |         |         |        V|
    1+30       6.5130      0.42  Q         |         |         |        V|
    1+35       6.5136      0.10  Q         |         |         |        V|
-----------------------------------------------------------------------
```

U n i t H y d r o g r a p h A n a l y s i s

Copyright (c) CIVILCADD/CIVILDESIGN, 1989 - 2008, Version 8.1
Study date 02/23/23 File: Area0124100.out

++

Riverside County Synthetic Unit Hydrology Method
RCFC & WCD Manual date - April 1978

Program License Serial Number 6094

English (in-lb) Input Units Used
English Rainfall Data (Inches) Input Values Used

English Units used in output format

JACKRABBIT TRAIL
DEVELOPED UNIT HYDROGRAPH ANALYSIS
AREA 1
100-YEAR

Drainage Area = 54.80(Ac.) = 0.086 Sq. Mi.
Drainage Area for Depth-Area Areal Adjustment = 54.80(Ac.) = 0.086 Sq. Mi.
Length along longest watercourse = 2544.00(Ft.)
Length along longest watercourse measured to centroid = 1672.10(Ft.)
Length along longest watercourse = 0.482 Mi.
Length along longest watercourse measured to centroid = 0.317 Mi.
Difference in elevation = 18.00(Ft.)
Slope along watercourse = 37.3585 Ft./Mi.
Average Manning's 'N' = 0.015
Lag time = 0.089 Hr.
Lag time = 5.31 Min.
25% of lag time = 1.33 Min.
40% of lag time = 2.13 Min.
Unit time = 5.00 Min.
Duration of storm = 24 Hour(s)
User Entered Base Flow = 0.00(CFS)

2 YEAR Area rainfall data:

Area(Ac.)[1]	Rainfall(In)[2]	Weighting[1*2]
54.80	2.54	139.19

100 YEAR Area rainfall data:

Area(Ac.)[1]	Rainfall(In)[2]	Weighting[1*2]
54.80	6.18	338.66

STORM EVENT (YEAR) = 100.00
Area Averaged 2-Year Rainfall = 2.540(In)
Area Averaged 100-Year Rainfall = 6.180(In)

Point rain (area averaged) = 6.180(In)
Areal adjustment factor = 99.99 %
Adjusted average point rain = 6.179(In)

Sub-Area Data:

Area(Ac.)	Runoff Index	Impervious %
54.800	69.20	0.344

Total Area Entered = 54.80(Ac.)

RI AMC2	RI AMC-3	Infil. Rate (In/Hr)	Impervious (Dec.%)	Adj. Infil. Rate (In/Hr)	Area% (Dec.)	F (In/Hr)
69.2	84.5	0.192	0.344	0.133	1.000	0.133
					Sum (F) =	0.133

Area averaged mean soil loss (F) (In/Hr) = 0.133
Minimum soil loss rate ((In/Hr)) = 0.066
(for 24 hour storm duration)
Soil low loss rate (decimal) = 0.625

U n i t H y d r o g r a p h
FOOTHILL S-Curve

Unit Hydrograph Data

Unit time period (hrs)		Time % of lag	Distribution Graph %	Unit Hydrograph (CFS)
1	0.083	94.088	12.433	6.866
2	0.167	188.177	54.787	30.258
3	0.250	282.265	19.667	10.862
4	0.333	376.353	8.109	4.478
5	0.417	470.442	3.134	1.731
6	0.500	564.530	0.960	0.530
7	0.583	658.618	0.630	0.348
8	0.667	752.707	0.281	0.155
			Sum = 100.000	Sum= 55.228

The following loss rate calculations reflect use of the minimum calculated

loss
 rate subtracted from the Storm Rain to produce the maximum Effective Rain
value

Unit	Time (Hr.)	Pattern Percent	Storm Rain (In/Hr)	Loss rate(In./Hr) Max	Low	Effective (In/Hr)
1	0.08	0.07	0.049	(0.236)	0.031	0.019
2	0.17	0.07	0.049	(0.235)	0.031	0.019
3	0.25	0.07	0.049	(0.234)	0.031	0.019
4	0.33	0.10	0.074	(0.233)	0.046	0.028
5	0.42	0.10	0.074	(0.232)	0.046	0.028
6	0.50	0.10	0.074	(0.231)	0.046	0.028
7	0.58	0.10	0.074	(0.230)	0.046	0.028
8	0.67	0.10	0.074	(0.229)	0.046	0.028
9	0.75	0.10	0.074	(0.228)	0.046	0.028
10	0.83	0.13	0.099	(0.227)	0.062	0.037
11	0.92	0.13	0.099	(0.227)	0.062	0.037
12	1.00	0.13	0.099	(0.226)	0.062	0.037
13	1.08	0.10	0.074	(0.225)	0.046	0.028
14	1.17	0.10	0.074	(0.224)	0.046	0.028
15	1.25	0.10	0.074	(0.223)	0.046	0.028
16	1.33	0.10	0.074	(0.222)	0.046	0.028
17	1.42	0.10	0.074	(0.221)	0.046	0.028
18	1.50	0.10	0.074	(0.220)	0.046	0.028
19	1.58	0.10	0.074	(0.219)	0.046	0.028
20	1.67	0.10	0.074	(0.219)	0.046	0.028
21	1.75	0.10	0.074	(0.218)	0.046	0.028
22	1.83	0.13	0.099	(0.217)	0.062	0.037
23	1.92	0.13	0.099	(0.216)	0.062	0.037
24	2.00	0.13	0.099	(0.215)	0.062	0.037
25	2.08	0.13	0.099	(0.214)	0.062	0.037
26	2.17	0.13	0.099	(0.213)	0.062	0.037
27	2.25	0.13	0.099	(0.212)	0.062	0.037
28	2.33	0.13	0.099	(0.212)	0.062	0.037
29	2.42	0.13	0.099	(0.211)	0.062	0.037
30	2.50	0.13	0.099	(0.210)	0.062	0.037
31	2.58	0.17	0.124	(0.209)	0.077	0.046
32	2.67	0.17	0.124	(0.208)	0.077	0.046
33	2.75	0.17	0.124	(0.207)	0.077	0.046
34	2.83	0.17	0.124	(0.206)	0.077	0.046
35	2.92	0.17	0.124	(0.206)	0.077	0.046
36	3.00	0.17	0.124	(0.205)	0.077	0.046
37	3.08	0.17	0.124	(0.204)	0.077	0.046
38	3.17	0.17	0.124	(0.203)	0.077	0.046
39	3.25	0.17	0.124	(0.202)	0.077	0.046
40	3.33	0.17	0.124	(0.201)	0.077	0.046
41	3.42	0.17	0.124	(0.201)	0.077	0.046
42	3.50	0.17	0.124	(0.200)	0.077	0.046
43	3.58	0.17	0.124	(0.199)	0.077	0.046
44	3.67	0.17	0.124	(0.198)	0.077	0.046
45	3.75	0.17	0.124	(0.197)	0.077	0.046
46	3.83	0.20	0.148	(0.196)	0.093	0.056
47	3.92	0.20	0.148	(0.196)	0.093	0.056
48	4.00	0.20	0.148	(0.195)	0.093	0.056

49	4.08	0.20	0.148	(0.194)	0.093	0.056
50	4.17	0.20	0.148	(0.193)	0.093	0.056
51	4.25	0.20	0.148	(0.192)	0.093	0.056
52	4.33	0.23	0.173	(0.191)	0.108	0.065
53	4.42	0.23	0.173	(0.191)	0.108	0.065
54	4.50	0.23	0.173	(0.190)	0.108	0.065
55	4.58	0.23	0.173	(0.189)	0.108	0.065
56	4.67	0.23	0.173	(0.188)	0.108	0.065
57	4.75	0.23	0.173	(0.187)	0.108	0.065
58	4.83	0.27	0.198	(0.187)	0.124	0.074
59	4.92	0.27	0.198	(0.186)	0.124	0.074
60	5.00	0.27	0.198	(0.185)	0.124	0.074
61	5.08	0.20	0.148	(0.184)	0.093	0.056
62	5.17	0.20	0.148	(0.183)	0.093	0.056
63	5.25	0.20	0.148	(0.183)	0.093	0.056
64	5.33	0.23	0.173	(0.182)	0.108	0.065
65	5.42	0.23	0.173	(0.181)	0.108	0.065
66	5.50	0.23	0.173	(0.180)	0.108	0.065
67	5.58	0.27	0.198	(0.179)	0.124	0.074
68	5.67	0.27	0.198	(0.179)	0.124	0.074
69	5.75	0.27	0.198	(0.178)	0.124	0.074
70	5.83	0.27	0.198	(0.177)	0.124	0.074
71	5.92	0.27	0.198	(0.176)	0.124	0.074
72	6.00	0.27	0.198	(0.175)	0.124	0.074
73	6.08	0.30	0.222	(0.175)	0.139	0.083
74	6.17	0.30	0.222	(0.174)	0.139	0.083
75	6.25	0.30	0.222	(0.173)	0.139	0.083
76	6.33	0.30	0.222	(0.172)	0.139	0.083
77	6.42	0.30	0.222	(0.172)	0.139	0.083
78	6.50	0.30	0.222	(0.171)	0.139	0.083
79	6.58	0.33	0.247	(0.170)	0.154	0.093
80	6.67	0.33	0.247	(0.169)	0.154	0.093
81	6.75	0.33	0.247	(0.168)	0.154	0.093
82	6.83	0.33	0.247	(0.168)	0.154	0.093
83	6.92	0.33	0.247	(0.167)	0.154	0.093
84	7.00	0.33	0.247	(0.166)	0.154	0.093
85	7.08	0.33	0.247	(0.165)	0.154	0.093
86	7.17	0.33	0.247	(0.165)	0.154	0.093
87	7.25	0.33	0.247	(0.164)	0.154	0.093
88	7.33	0.37	0.272	0.163	(0.170)	0.109
89	7.42	0.37	0.272	0.162	(0.170)	0.109
90	7.50	0.37	0.272	0.162	(0.170)	0.110
91	7.58	0.40	0.297	0.161	(0.185)	0.136
92	7.67	0.40	0.297	0.160	(0.185)	0.136
93	7.75	0.40	0.297	0.159	(0.185)	0.137
94	7.83	0.43	0.321	0.159	(0.201)	0.163
95	7.92	0.43	0.321	0.158	(0.201)	0.163
96	8.00	0.43	0.321	0.157	(0.201)	0.164
97	8.08	0.50	0.371	0.157	(0.232)	0.214
98	8.17	0.50	0.371	0.156	(0.232)	0.215
99	8.25	0.50	0.371	0.155	(0.232)	0.216
100	8.33	0.50	0.371	0.154	(0.232)	0.216
101	8.42	0.50	0.371	0.154	(0.232)	0.217
102	8.50	0.50	0.371	0.153	(0.232)	0.218

103	8.58	0.53	0.395	0.152	(0.247)	0.243
104	8.67	0.53	0.395	0.151	(0.247)	0.244
105	8.75	0.53	0.395	0.151	(0.247)	0.245
106	8.83	0.57	0.420	0.150	(0.263)	0.270
107	8.92	0.57	0.420	0.149	(0.263)	0.271
108	9.00	0.57	0.420	0.149	(0.263)	0.272
109	9.08	0.63	0.470	0.148	(0.294)	0.322
110	9.17	0.63	0.470	0.147	(0.294)	0.322
111	9.25	0.63	0.470	0.147	(0.294)	0.323
112	9.33	0.67	0.494	0.146	(0.309)	0.349
113	9.42	0.67	0.494	0.145	(0.309)	0.349
114	9.50	0.67	0.494	0.144	(0.309)	0.350
115	9.58	0.70	0.519	0.144	(0.324)	0.375
116	9.67	0.70	0.519	0.143	(0.324)	0.376
117	9.75	0.70	0.519	0.142	(0.324)	0.377
118	9.83	0.73	0.544	0.142	(0.340)	0.402
119	9.92	0.73	0.544	0.141	(0.340)	0.403
120	10.00	0.73	0.544	0.140	(0.340)	0.403
121	10.08	0.50	0.371	0.140	(0.232)	0.231
122	10.17	0.50	0.371	0.139	(0.232)	0.232
123	10.25	0.50	0.371	0.138	(0.232)	0.232
124	10.33	0.50	0.371	0.138	(0.232)	0.233
125	10.42	0.50	0.371	0.137	(0.232)	0.234
126	10.50	0.50	0.371	0.136	(0.232)	0.234
127	10.58	0.67	0.494	0.136	(0.309)	0.359
128	10.67	0.67	0.494	0.135	(0.309)	0.359
129	10.75	0.67	0.494	0.134	(0.309)	0.360
130	10.83	0.67	0.494	0.134	(0.309)	0.361
131	10.92	0.67	0.494	0.133	(0.309)	0.361
132	11.00	0.67	0.494	0.132	(0.309)	0.362
133	11.08	0.63	0.470	0.132	(0.294)	0.338
134	11.17	0.63	0.470	0.131	(0.294)	0.339
135	11.25	0.63	0.470	0.130	(0.294)	0.339
136	11.33	0.63	0.470	0.130	(0.294)	0.340
137	11.42	0.63	0.470	0.129	(0.294)	0.341
138	11.50	0.63	0.470	0.128	(0.294)	0.341
139	11.58	0.57	0.420	0.128	(0.263)	0.292
140	11.67	0.57	0.420	0.127	(0.263)	0.293
141	11.75	0.57	0.420	0.127	(0.263)	0.294
142	11.83	0.60	0.445	0.126	(0.278)	0.319
143	11.92	0.60	0.445	0.125	(0.278)	0.320
144	12.00	0.60	0.445	0.125	(0.278)	0.320
145	12.08	0.83	0.618	0.124	(0.386)	0.494
146	12.17	0.83	0.618	0.123	(0.386)	0.495
147	12.25	0.83	0.618	0.123	(0.386)	0.495
148	12.33	0.87	0.643	0.122	(0.402)	0.520
149	12.42	0.87	0.643	0.122	(0.402)	0.521
150	12.50	0.87	0.643	0.121	(0.402)	0.522
151	12.58	0.93	0.692	0.120	(0.433)	0.572
152	12.67	0.93	0.692	0.120	(0.433)	0.572
153	12.75	0.93	0.692	0.119	(0.433)	0.573
154	12.83	0.97	0.717	0.119	(0.448)	0.598
155	12.92	0.97	0.717	0.118	(0.448)	0.599
156	13.00	0.97	0.717	0.117	(0.448)	0.599

157	13.08	1.13	0.840	0.117	(0.525)	0.724
158	13.17	1.13	0.840	0.116	(0.525)	0.724
159	13.25	1.13	0.840	0.116	(0.525)	0.725
160	13.33	1.13	0.840	0.115	(0.525)	0.725
161	13.42	1.13	0.840	0.114	(0.525)	0.726
162	13.50	1.13	0.840	0.114	(0.525)	0.727
163	13.58	0.77	0.568	0.113	(0.355)	0.455
164	13.67	0.77	0.568	0.113	(0.355)	0.456
165	13.75	0.77	0.568	0.112	(0.355)	0.456
166	13.83	0.77	0.568	0.112	(0.355)	0.457
167	13.92	0.77	0.568	0.111	(0.355)	0.458
168	14.00	0.77	0.568	0.110	(0.355)	0.458
169	14.08	0.90	0.667	0.110	(0.417)	0.558
170	14.17	0.90	0.667	0.109	(0.417)	0.558
171	14.25	0.90	0.667	0.109	(0.417)	0.559
172	14.33	0.87	0.643	0.108	(0.402)	0.535
173	14.42	0.87	0.643	0.108	(0.402)	0.535
174	14.50	0.87	0.643	0.107	(0.402)	0.536
175	14.58	0.87	0.643	0.106	(0.402)	0.536
176	14.67	0.87	0.643	0.106	(0.402)	0.537
177	14.75	0.87	0.643	0.105	(0.402)	0.537
178	14.83	0.83	0.618	0.105	(0.386)	0.513
179	14.92	0.83	0.618	0.104	(0.386)	0.514
180	15.00	0.83	0.618	0.104	(0.386)	0.514
181	15.08	0.80	0.593	0.103	(0.371)	0.490
182	15.17	0.80	0.593	0.103	(0.371)	0.490
183	15.25	0.80	0.593	0.102	(0.371)	0.491
184	15.33	0.77	0.568	0.102	(0.355)	0.467
185	15.42	0.77	0.568	0.101	(0.355)	0.467
186	15.50	0.77	0.568	0.101	(0.355)	0.468
187	15.58	0.63	0.470	0.100	(0.294)	0.370
188	15.67	0.63	0.470	0.100	(0.294)	0.370
189	15.75	0.63	0.470	0.099	(0.294)	0.371
190	15.83	0.63	0.470	0.099	(0.294)	0.371
191	15.92	0.63	0.470	0.098	(0.294)	0.372
192	16.00	0.63	0.470	0.098	(0.294)	0.372
193	16.08	0.13	0.099	(0.097)	0.062	0.037
194	16.17	0.13	0.099	(0.097)	0.062	0.037
195	16.25	0.13	0.099	(0.096)	0.062	0.037
196	16.33	0.13	0.099	(0.096)	0.062	0.037
197	16.42	0.13	0.099	(0.095)	0.062	0.037
198	16.50	0.13	0.099	(0.095)	0.062	0.037
199	16.58	0.10	0.074	(0.094)	0.046	0.028
200	16.67	0.10	0.074	(0.094)	0.046	0.028
201	16.75	0.10	0.074	(0.093)	0.046	0.028
202	16.83	0.10	0.074	(0.093)	0.046	0.028
203	16.92	0.10	0.074	(0.092)	0.046	0.028
204	17.00	0.10	0.074	(0.092)	0.046	0.028
205	17.08	0.17	0.124	(0.091)	0.077	0.046
206	17.17	0.17	0.124	(0.091)	0.077	0.046
207	17.25	0.17	0.124	(0.090)	0.077	0.046
208	17.33	0.17	0.124	(0.090)	0.077	0.046
209	17.42	0.17	0.124	(0.090)	0.077	0.046
210	17.50	0.17	0.124	(0.089)	0.077	0.046

211	17.58	0.17	0.124	(0.089)	0.077	0.046
212	17.67	0.17	0.124	(0.088)	0.077	0.046
213	17.75	0.17	0.124	(0.088)	0.077	0.046
214	17.83	0.13	0.099	(0.087)	0.062	0.037
215	17.92	0.13	0.099	(0.087)	0.062	0.037
216	18.00	0.13	0.099	(0.086)	0.062	0.037
217	18.08	0.13	0.099	(0.086)	0.062	0.037
218	18.17	0.13	0.099	(0.086)	0.062	0.037
219	18.25	0.13	0.099	(0.085)	0.062	0.037
220	18.33	0.13	0.099	(0.085)	0.062	0.037
221	18.42	0.13	0.099	(0.084)	0.062	0.037
222	18.50	0.13	0.099	(0.084)	0.062	0.037
223	18.58	0.10	0.074	(0.084)	0.046	0.028
224	18.67	0.10	0.074	(0.083)	0.046	0.028
225	18.75	0.10	0.074	(0.083)	0.046	0.028
226	18.83	0.07	0.049	(0.082)	0.031	0.019
227	18.92	0.07	0.049	(0.082)	0.031	0.019
228	19.00	0.07	0.049	(0.082)	0.031	0.019
229	19.08	0.10	0.074	(0.081)	0.046	0.028
230	19.17	0.10	0.074	(0.081)	0.046	0.028
231	19.25	0.10	0.074	(0.080)	0.046	0.028
232	19.33	0.13	0.099	(0.080)	0.062	0.037
233	19.42	0.13	0.099	(0.080)	0.062	0.037
234	19.50	0.13	0.099	(0.079)	0.062	0.037
235	19.58	0.10	0.074	(0.079)	0.046	0.028
236	19.67	0.10	0.074	(0.079)	0.046	0.028
237	19.75	0.10	0.074	(0.078)	0.046	0.028
238	19.83	0.07	0.049	(0.078)	0.031	0.019
239	19.92	0.07	0.049	(0.078)	0.031	0.019
240	20.00	0.07	0.049	(0.077)	0.031	0.019
241	20.08	0.10	0.074	(0.077)	0.046	0.028
242	20.17	0.10	0.074	(0.076)	0.046	0.028
243	20.25	0.10	0.074	(0.076)	0.046	0.028
244	20.33	0.10	0.074	(0.076)	0.046	0.028
245	20.42	0.10	0.074	(0.075)	0.046	0.028
246	20.50	0.10	0.074	(0.075)	0.046	0.028
247	20.58	0.10	0.074	(0.075)	0.046	0.028
248	20.67	0.10	0.074	(0.075)	0.046	0.028
249	20.75	0.10	0.074	(0.074)	0.046	0.028
250	20.83	0.07	0.049	(0.074)	0.031	0.019
251	20.92	0.07	0.049	(0.074)	0.031	0.019
252	21.00	0.07	0.049	(0.073)	0.031	0.019
253	21.08	0.10	0.074	(0.073)	0.046	0.028
254	21.17	0.10	0.074	(0.073)	0.046	0.028
255	21.25	0.10	0.074	(0.072)	0.046	0.028
256	21.33	0.07	0.049	(0.072)	0.031	0.019
257	21.42	0.07	0.049	(0.072)	0.031	0.019
258	21.50	0.07	0.049	(0.072)	0.031	0.019
259	21.58	0.10	0.074	(0.071)	0.046	0.028
260	21.67	0.10	0.074	(0.071)	0.046	0.028
261	21.75	0.10	0.074	(0.071)	0.046	0.028
262	21.83	0.07	0.049	(0.071)	0.031	0.019
263	21.92	0.07	0.049	(0.070)	0.031	0.019
264	22.00	0.07	0.049	(0.070)	0.031	0.019

```
265  22.08     0.10      0.074       (  0.070)       0.046        0.028
266  22.17     0.10      0.074       (  0.070)       0.046        0.028
267  22.25     0.10      0.074       (  0.069)       0.046        0.028
268  22.33     0.07      0.049       (  0.069)       0.031        0.019
269  22.42     0.07      0.049       (  0.069)       0.031        0.019
270  22.50     0.07      0.049       (  0.069)       0.031        0.019
271  22.58     0.07      0.049       (  0.069)       0.031        0.019
272  22.67     0.07      0.049       (  0.068)       0.031        0.019
273  22.75     0.07      0.049       (  0.068)       0.031        0.019
274  22.83     0.07      0.049       (  0.068)       0.031        0.019
275  22.92     0.07      0.049       (  0.068)       0.031        0.019
276  23.00     0.07      0.049       (  0.068)       0.031        0.019
277  23.08     0.07      0.049       (  0.068)       0.031        0.019
278  23.17     0.07      0.049       (  0.067)       0.031        0.019
279  23.25     0.07      0.049       (  0.067)       0.031        0.019
280  23.33     0.07      0.049       (  0.067)       0.031        0.019
281  23.42     0.07      0.049       (  0.067)       0.031        0.019
282  23.50     0.07      0.049       (  0.067)       0.031        0.019
283  23.58     0.07      0.049       (  0.067)       0.031        0.019
284  23.67     0.07      0.049       (  0.067)       0.031        0.019
285  23.75     0.07      0.049       (  0.067)       0.031        0.019
286  23.83     0.07      0.049       (  0.067)       0.031        0.019
287  23.92     0.07      0.049       (  0.066)       0.031        0.019
288  24.00     0.07      0.049       (  0.066)       0.031        0.019
                (Loss Rate Not Used)
    Sum =     100.0                                   Sum =    48.4
       Flood volume = Effective rainfall      4.03(In)
        times area      54.8(Ac.)/[(In)/(Ft.)] =      18.4(Ac.Ft)
       Total soil loss =      2.15(In)
       Total soil loss =     9.799(Ac.Ft)
       Total rainfall =      6.18(In)
       Flood volume =      802370.6 Cubic Feet
       Total soil loss =      426848.1 Cubic Feet
       --------------------------------------------------------------------
        Peak flow rate of this hydrograph =     40.040(CFS)
       --------------------------------------------------------------------
       ++++++++++++++++++++++++++++++++++++++++++++++++++++++++++++++++++++
                           24 - H O U R    S T O R M
                      R u n o f f      H y d r o g r a p h
       --------------------------------------------------------------------
                   Hydrograph in   5   Minute intervals ((CFS))

       --------------------------------------------------------------------
 Time(h+m) Volume Ac.Ft   Q(CFS)  0       12.5      25.0      37.5      50.0
 ----------------------------------------------------------------------
   0+ 5       0.0009      0.13  Q         |         |         |         |
   0+10       0.0056      0.69  Q         |         |         |         |
   0+15       0.0117      0.89  Q         |         |         |         |
   0+20       0.0189      1.04  Q         |         |         |         |
   0+25       0.0282      1.35  VQ        |         |         |         |
   0+30       0.0382      1.46  VQ        |         |         |         |
   0+35       0.0486      1.51  VQ        |         |         |         |
   0+40       0.0591      1.53  VQ        |         |         |         |
   0+45       0.0697      1.53  VQ        |         |         |         |
```

0+50	0.0807	1.60	VQ				
0+55	0.0937	1.88	VQ				
1+ 0	0.1073	1.98	VQ				
1+ 5	0.1208	1.96	VQ				
1+10	0.1325	1.69	VQ				
1+15	0.1435	1.60	VQ				
1+20	0.1542	1.56	VQ				
1+25	0.1649	1.55	VQ				
1+30	0.1755	1.54	VQ				
1+35	0.1861	1.54	VQ				
1+40	0.1967	1.54	VQ				
1+45	0.2072	1.54	VQ				
1+50	0.2183	1.60	VQ				
1+55	0.2312	1.88	VQ				
2+ 0	0.2449	1.98	VQ				
2+ 5	0.2588	2.02	VQ				
2+10	0.2728	2.04	VQ				
2+15	0.2869	2.04	VQ				
2+20	0.3010	2.05	VQ				
2+25	0.3151	2.05	VQ				
2+30	0.3292	2.05	VQ				
2+35	0.3438	2.11	VQ				
2+40	0.3603	2.39	VQ				
2+45	0.3774	2.49	VQ				
2+50	0.3949	2.54	V Q				
2+55	0.4125	2.55	V Q				
3+ 0	0.4301	2.56	V Q				
3+ 5	0.4477	2.56	V Q				
3+10	0.4653	2.56	|VQ				
3+15	0.4830	2.56	|VQ				
3+20	0.5006	2.56	|VQ				
3+25	0.5183	2.56	|VQ				
3+30	0.5359	2.56	|VQ				
3+35	0.5535	2.56	|VQ				
3+40	0.5712	2.56	|VQ				
3+45	0.5888	2.56	|VQ				
3+50	0.6069	2.62	|VQ				
3+55	0.6269	2.91	|VQ				
4+ 0	0.6476	3.01	|VQ				
4+ 5	0.6686	3.05	|VQ				
4+10	0.6897	3.06	|VQ				
4+15	0.7108	3.07	|VQ				
4+20	0.7324	3.14	|VQ				
4+25	0.7559	3.42	|VQ				
4+30	0.7802	3.52	|VQ				
4+35	0.8047	3.56	|VQ				
4+40	0.8293	3.58	|VQ				
4+45	0.8540	3.58	|VQ				
4+50	0.8791	3.65	|VQ				
4+55	0.9061	3.93	|V Q				
5+ 0	0.9339	4.03	| VQ				
5+ 5	0.9611	3.94	| VQ				
5+10	0.9845	3.40	| Q				
5+15	1.0065	3.20	| Q				

```
5+20       1.0285      3.19  | Q       |         |         |         |
5+25       1.0521      3.44  | Q       |         |         |         |
5+30       1.0764      3.53  | Q       |         |         |         |
5+35       1.1014      3.63  | Q       |         |         |         |
5+40       1.1284      3.92  | VQ      |         |         |         |
5+45       1.1561      4.03  | VQ      |         |         |         |
5+50       1.1842      4.07  | VQ      |         |         |         |
5+55       1.2123      4.09  | VQ      |         |         |         |
6+ 0       1.2405      4.09  | VQ      |         |         |         |
6+ 5       1.2692      4.16  | VQ      |         |         |         |
6+10       1.2997      4.44  | VQ      |         |         |         |
6+15       1.3310      4.54  | VQ      |         |         |         |
6+20       1.3626      4.58  | VQ      |         |         |         |
6+25       1.3943      4.60  |  Q      |         |         |         |
6+30       1.4260      4.60  |  Q      |         |         |         |
6+35       1.4582      4.67  |  Q      |         |         |         |
6+40       1.4923      4.95  |  Q      |         |         |         |
6+45       1.5271      5.05  |  VQ     |         |         |         |
6+50       1.5622      5.10  |  VQ     |         |         |         |
6+55       1.5974      5.11  |  VQ     |         |         |         |
7+ 0       1.6326      5.12  |  VQ     |         |         |         |
7+ 5       1.6679      5.12  |  VQ     |         |         |         |
7+10       1.7032      5.12  |  VQ     |         |         |         |
7+15       1.7385      5.12  |  VQ     |         |         |         |
7+20       1.7745      5.23  |  VQ     |         |         |         |
7+25       1.8139      5.72  |  VQ     |         |         |         |
7+30       1.8547      5.92  |   Q     |         |         |         |
7+35       1.8974      6.20  |   Q     |         |         |         |
7+40       1.9457      7.02  |   VQ    |         |         |         |
7+45       1.9962      7.33  |   VQ    |         |         |         |
7+50       2.0490      7.66  |   V Q   |         |         |         |
7+55       2.1075      8.49  |   V Q   |         |         |         |
8+ 0       2.1682      8.82  |   V  Q  |         |         |         |
8+ 5       2.2324      9.32  |   V  Q  |         |         |         |
8+10       2.3074     10.90  |    V  Q |         |         |         |
8+15       2.3866     11.49  |    V   Q|         |         |         |
8+20       2.4676     11.76  |    V   Q|         |         |         |
8+25       2.5495     11.89  |    V   Q|         |         |         |
8+30       2.6318     11.96  |    V   Q|         |         |         |
8+35       2.7157     12.18  |    V   Q|         |         |         |
8+40       2.8051     12.98  |     V   Q         |         |         |
8+45       2.8966     13.29  |     V   Q         |         |         |
8+50       2.9903     13.61  |     V   Q         |         |         |
8+55       3.0897     14.44  |     V   |Q        |         |         |
9+ 0       3.1914     14.76  |     V   |Q        |         |         |
9+ 5       3.2965     15.26  |      V  | Q       |         |         |
9+10       3.4124     16.84  |      V  |  Q      |         |         |
9+15       3.5325     17.43  |      V  |  Q      |         |         |
9+20       3.6555     17.87  |      V  |   Q     |         |         |
9+25       3.7846     18.74  |       V |   Q     |         |         |
9+30       3.9160     19.08  |       V |    Q    |         |         |
9+35       4.0497     19.41  |       V |    Q    |         |         |
9+40       4.1891     20.25  |        V|     Q   |         |         |
9+45       4.3308     20.57  |        V|     Q   |         |         |
```

9+50	4.4747	20.90	V| Q | | |
9+55	4.6243	21.73	V Q | | |
10+ 0	4.7762	22.05	V Q | | |
10+ 5	4.9209	21.02	V Q | | |
10+10	5.0302	15.86	V Q | | |
10+15	5.1268	14.03	|Q | | |
10+20	5.2185	13.30	QV | | |
10+25	5.3083	13.05	QV | | |
10+30	5.3978	12.99	QV | | |
10+35	5.4929	13.82	|Q | | |
10+40	5.6139	17.57	| V Q | | |
10+45	5.7444	18.95	| V Q | | |
10+50	5.8790	19.54	| V Q | | |
10+55	6.0153	19.79	| V Q | | |
11+ 0	6.1523	19.89	| V Q | | |
11+ 5	6.2886	19.80	| V Q | | |
11+10	6.4202	19.11	| V Q | | |
11+15	6.5502	18.87	| VQ | | |
11+20	6.6797	18.80	| VQ | | |
11+25	6.8091	18.79	| VQ | | |
11+30	6.9387	18.81	| Q | | |
11+35	7.0661	18.50	| QV | | |
11+40	7.1834	17.04	| Q V | | |
11+45	7.2973	16.53	| Q V | | |
11+50	7.4111	16.52	| Q V | | |
11+55	7.5296	17.22	| Q V | | |
12+ 0	7.6501	17.49	| Q V | | |
12+ 5	7.7796	18.81	| QV | | |
12+10	7.9457	24.12	| V Q| | |
12+15	8.1251	26.04	| V Q | |
12+20	8.3113	27.03	| V |Q | |
12+25	8.5049	28.12	| V | Q | |
12+30	8.7013	28.51	| V | Q | |
12+35	8.9014	29.06	| V| Q | |
12+40	9.1125	30.66	| V| Q | |
12+45	9.3277	31.24	| V Q | |
12+50	9.5458	31.67	| V Q | |
12+55	9.7700	32.55	| |V Q | |
13+ 0	9.9964	32.87	| |V Q | |
13+ 5	10.2297	33.88	| | V Q | |
13+10	10.4894	37.71	| | V Q |
13+15	10.7587	39.10	| | V |Q |
13+20	11.0321	39.69	| | V |Q |
13+25	11.3071	39.94	| | V |Q |
13+30	11.5829	40.04	| | V | Q |
13+35	11.8463	38.25	| | V Q |
13+40	12.0534	30.07	| | Q V | |
13+45	12.2403	27.14	| ||Q V | |
13+50	12.4191	25.96	| |Q V | |
13+55	12.5949	25.52	| |Q V | |
14+ 0	12.7699	25.41	| |Q V | |
14+ 5	12.9491	26.02	| |Q V | |
14+10	13.1488	29.00	| | Q V | |
14+15	13.3562	30.11	| | Q V| |

```
14+20      13.5657     30.41  |         |         |   Q    V|         |
14+25      13.7714     29.87  |         |         |  Q     V|         |
14+30      13.9758     29.68  |         |         |  Q      V         |
14+35      14.1799     29.64  |         |         |  Q      V         |
14+40      14.3840     29.64  |         |         |  Q      |V        |
14+45      14.5883     29.66  |         |         |  Q      |V        |
14+50      14.7915     29.51  |         |         |  Q      | V       |
14+55      14.9898     28.79  |         |         |  Q      | V       |
15+ 0      15.1864     28.55  |         |         | Q       | V       |
15+ 5      15.3812     28.30  |         |         | Q       |  V      |
15+10      15.5709     27.53  |         |         | Q       |  V      |
15+15      15.7588     27.28  |         |         |Q        |   V     |
15+20      15.9449     27.02  |         |         |Q        |   V     |
15+25      16.1257     26.26  |         |         |Q        |    V    |
15+30      16.3048     26.00  |         |         Q         |    V    |
15+35      16.4786     25.23  |         |         Q         |    V    |
15+40      16.6316     22.22  |         |      Q  |         |     V   |
15+45      16.7774     21.16  |         |     Q   |         |     V   |
15+50      16.9202     20.74  |         |     Q   |         |     V   |
15+55      17.0620     20.59  |         |     Q   |         |      V  |
16+ 0      17.2037     20.57  |         |     Q   |         |      V  |
16+ 5      17.3294     18.26  |         |   Q     |         |      V  |
16+10      17.3853      8.11  |     Q   |         |         |      V  |
16+15      17.4161      4.47  |  Q      |         |         |      V  |
16+20      17.4366      2.97  | Q       |         |         |      V  |
16+25      17.4531      2.39  |Q        |         |         |      V  |
16+30      17.4683      2.22  |Q        |         |         |      V  |
16+35      17.4824      2.04  |Q        |         |         |      V  |
16+40      17.4941      1.70  |Q        |         |         |      V  |
16+45      17.5052      1.60  |Q        |         |         |       V |
16+50      17.5159      1.56  |Q        |         |         |       V |
16+55      17.5266      1.55  |Q        |         |         |       V |
17+ 0      17.5372      1.54  |Q        |         |         |       V |
17+ 5      17.5486      1.67  |Q        |         |         |       V |
17+10      17.5640      2.23  |Q        |         |         |       V |
17+15      17.5807      2.43  |Q        |         |         |       V |
17+20      17.5980      2.51  | Q       |         |         |       V |
17+25      17.6155      2.54  | Q       |         |         |       V |
17+30      17.6330      2.55  | Q       |         |         |       V |
17+35      17.6507      2.56  | Q       |         |         |       V |
17+40      17.6683      2.56  | Q       |         |         |       V |
17+45      17.6859      2.56  | Q       |         |         |       V |
17+50      17.7031      2.50  |Q        |         |         |       V |
17+55      17.7184      2.22  |Q        |         |         |       V |
18+ 0      17.7330      2.12  |Q        |         |         |       V |
18+ 5      17.7473      2.07  |Q        |         |         |       V |
18+10      17.7614      2.06  |Q        |         |         |       V |
18+15      17.7756      2.05  |Q        |         |         |       V |
18+20      17.7897      2.05  |Q        |         |         |       V |
18+25      17.8038      2.05  |Q        |         |         |       V |
18+30      17.8179      2.05  |Q        |         |         |       V |
18+35      17.8316      1.99  |Q        |         |         |       V |
18+40      17.8433      1.70  |Q        |         |         |       V |
18+45      17.8544      1.60  |Q        |         |         |       V |
```

```
18+50      17.8647      1.50  |Q         |          |          |        V |
18+55      17.8730      1.20  Q          |          |          |        V |
19+ 0      17.8805      1.10  Q          |          |          |        V |
19+ 5      17.8882      1.12  Q          |          |          |        V |
19+10      17.8977      1.38  |Q         |          |          |        V |
19+15      17.9078      1.47  |Q         |          |          |        V |
19+20      17.9187      1.58  |Q         |          |          |        V |
19+25      17.9316      1.87  |Q         |          |          |        V |
19+30      17.9452      1.98  |Q         |          |          |        V |
19+35      17.9587      1.96  |Q         |          |          |        V |
19+40      17.9703      1.69  |Q         |          |          |         V|
19+45      17.9814      1.60  |Q         |          |          |         V|
19+50      17.9917      1.50  |Q         |          |          |         V|
19+55      17.9999      1.20  Q          |          |          |         V|
20+ 0      18.0075      1.10  Q          |          |          |         V|
20+ 5      18.0152      1.12  Q          |          |          |         V|
20+10      18.0247      1.38  |Q         |          |          |         V|
20+15      18.0348      1.47  |Q         |          |          |         V|
20+20      18.0452      1.51  |Q         |          |          |         V|
20+25      18.0557      1.53  |Q         |          |          |         V|
20+30      18.0663      1.53  |Q         |          |          |         V|
20+35      18.0769      1.54  |Q         |          |          |         V|
20+40      18.0875      1.54  |Q         |          |          |         V|
20+45      18.0980      1.54  |Q         |          |          |         V|
20+50      18.1082      1.47  |Q         |          |          |         V|
20+55      18.1164      1.19  Q          |          |          |         V|
21+ 0      18.1239      1.09  Q          |          |          |         V|
21+ 5      18.1316      1.11  Q          |          |          |         V|
21+10      18.1411      1.38  |Q         |          |          |         V|
21+15      18.1512      1.47  |Q         |          |          |         V|
21+20      18.1612      1.45  |Q         |          |          |         V|
21+25      18.1693      1.18  Q          |          |          |         V|
21+30      18.1768      1.09  Q          |          |          |         V|
21+35      18.1845      1.11  Q          |          |          |         V|
21+40      18.1940      1.38  |Q         |          |          |         V|
21+45      18.2041      1.47  |Q         |          |          |         V|
21+50      18.2141      1.45  |Q         |          |          |         V|
21+55      18.2223      1.18  Q          |          |          |         V|
22+ 0      18.2297      1.09  Q          |          |          |         V|
22+ 5      18.2374      1.11  Q          |          |          |         V|
22+10      18.2469      1.38  |Q         |          |          |         V|
22+15      18.2570      1.47  |Q         |          |          |         V|
22+20      18.2670      1.45  |Q         |          |          |         V|
22+25      18.2752      1.18  Q          |          |          |         V|
22+30      18.2826      1.09  Q          |          |          |         V|
22+35      18.2899      1.05  Q          |          |          |         V|
22+40      18.2970      1.03  Q          |          |          |         V|
22+45      18.3041      1.03  Q          |          |          |         V|
22+50      18.3111      1.03  Q          |          |          |         V|
22+55      18.3182      1.02  Q          |          |          |         V|
23+ 0      18.3253      1.02  Q          |          |          |         V|
23+ 5      18.3323      1.02  Q          |          |          |         V|
23+10      18.3394      1.02  Q          |          |          |         V|
23+15      18.3464      1.02  Q          |          |          |         V|
```

```
   23+20      18.3535      1.02  Q          |          |          |         V|
   23+25      18.3605      1.02  Q          |          |          |         V|
   23+30      18.3676      1.02  Q          |          |          |         V|
   23+35      18.3746      1.02  Q          |          |          |         V|
   23+40      18.3817      1.02  Q          |          |          |         V|
   23+45      18.3887      1.02  Q          |          |          |         V|
   23+50      18.3958      1.02  Q          |          |          |         V|
   23+55      18.4029      1.02  Q          |          |          |         V|
   24+ 0      18.4099      1.02  Q          |          |          |         V|
   24+ 5      18.4161      0.90  Q          |          |          |         V|
   24+10      18.4184      0.34  Q          |          |          |         V|
   24+15      18.4193      0.13  Q          |          |          |         V|
   24+20      18.4197      0.05  Q          |          |          |         V|
   24+25      18.4198      0.02  Q          |          |          |         V|
   24+30      18.4199      0.01  Q          |          |          |         V|
   24+35      18.4199      0.00  Q          |          |          |         V|
-----------------------------------------------------------------------
```

U n i t H y d r o g r a p h A n a l y s i s

Copyright (c) CIVILCADD/CIVILDESIGN, 1989 - 2008, Version 8.1
Study date 02/22/23 File: Area061100.out

++

Riverside County Synthetic Unit Hydrology Method
RCFC & WCD Manual date - April 1978

Program License Serial Number 6094

English (in-lb) Input Units Used
English Rainfall Data (Inches) Input Values Used

English Units used in output format

JACKRABBIT TRAIL
DEVELOPED UNIT HYDROGRAPH ANALYSIS
AREA 06
100-YEAR

Drainage Area = 34.00(Ac.) = 0.053 Sq. Mi.
Drainage Area for Depth-Area Areal Adjustment = 34.00(Ac.) = 0.053 Sq. Mi.
Length along longest watercourse = 1710.80(Ft.)
Length along longest watercourse measured to centroid = 1365.80(Ft.)
Length along longest watercourse = 0.324 Mi.
Length along longest watercourse measured to centroid = 0.259 Mi.
Difference in elevation = 122.50(Ft.)
Slope along watercourse = 378.0687 Ft./Mi.
Average Manning's 'N' = 0.015
Lag time = 0.045 Hr.
Lag time = 2.73 Min.
25% of lag time = 0.68 Min.
40% of lag time = 1.09 Min.
Unit time = 5.00 Min.
Duration of storm = 1 Hour(s)
User Entered Base Flow = 0.00(CFS)

2 YEAR Area rainfall data:

```
Area(Ac.)[1]       Rainfall(In)[2]      Weighting[1*2]
       34.00            0.55                   18.73

100 YEAR Area rainfall data:


Area(Ac.)[1]       Rainfall(In)[2]      Weighting[1*2]
       34.00            1.56                   53.04

STORM EVENT (YEAR) =  100.00
Area Averaged 2-Year Rainfall =    0.551(In)
Area Averaged 100-Year Rainfall =    1.560(In)

Point rain (area averaged) =    1.560(In)
Areal adjustment factor =   99.97 %
Adjusted average point rain =    1.560(In)

Sub-Area Data:
Area(Ac.)         Runoff Index   Impervious %
    34.000           60.60         0.584
 Total Area Entered =     34.00(Ac.)


RI    RI   Infil. Rate Impervious   Adj. Infil. Rate  Area%     F
AMC2 AMC-3     (In/Hr)    (Dec.%)     (In/Hr)      (Dec.)    (In/Hr)
60.6  78.5      0.262     0.584        0.124       1.000      0.124
                                                 Sum (F) =   0.124
Area averaged mean soil loss (F) (In/Hr) =  0.124
Minimum soil loss rate ((In/Hr)) =  0.062
(for 24 hour storm duration)
Soil low loss rate (decimal) =   0.433
---------------------------------------------------------------------
Slope of intensity-duration curve for a 1 hour storm =0.5300
----------------------------------------------------------------------

                U n i t  H y d r o g r a p h
                        FOOTHILL S-Curve
--------------------------------------------------------------------
                Unit Hydrograph Data
---------------------------------------------------------------------
Unit time period   Time % of lag   Distribution   Unit Hydrograph
    (hrs)                           Graph %            (CFS)
---------------------------------------------------------------------
    1   0.083        183.398         38.785             13.290
    2   0.167        366.795         51.546             17.663
    3   0.250        550.193          8.138              2.789
    4   0.333        733.590          1.531              0.524
                                Sum = 100.000   Sum=      34.266
-------------------------------------------------------------------


 The following loss rate calculations reflect use of the minimum calculated
loss
 rate subtracted from the Storm Rain to produce the maximum Effective Rain
```

value

Unit Time (Hr.)	Pattern Percent	Storm Rain (In/Hr)	Loss rate(In./Hr) Max	Low	Effective (In/Hr)
1 0.08	3.40	0.636	0.124	(0.276)	0.512
2 0.17	4.70	0.880	0.124	(0.381)	0.755
3 0.25	4.70	0.880	0.124	(0.381)	0.755
4 0.33	5.10	0.954	0.124	(0.413)	0.830
5 0.42	5.80	1.085	0.124	(0.470)	0.961
6 0.50	5.90	1.104	0.124	(0.478)	0.980
7 0.58	7.10	1.329	0.124	(0.575)	1.204
8 0.67	8.70	1.628	0.124	(0.705)	1.504
9 0.75	13.20	2.470	0.124	(1.070)	2.346
10 0.83	29.70	5.558	0.124	(2.407)	5.434
11 0.92	7.70	1.441	0.124	(0.624)	1.317
12 1.00	4.00	0.749	0.124	(0.324)	0.624

(Loss Rate Not Used)

Sum = 100.0 Sum = 17.2

Flood volume = Effective rainfall 1.44(In)
times area 34.0(Ac.)/[(In)/(Ft.)] = 4.1(Ac.Ft)
Total soil loss = 0.12(In)
Total soil loss = 0.352(Ac.Ft)
Total rainfall = 1.56(In)
Flood volume = 177139.4 Cubic Feet
Total soil loss = 15336.5 Cubic Feet

Peak flow rate of this hydrograph = 120.869(CFS)

++

1 - H O U R S T O R M
R u n o f f H y d r o g r a p h

Hydrograph in 5 Minute intervals ((CFS))

```
Time(h+m) Volume Ac.Ft   Q(CFS)  0       50.0     100.0     150.0     200.0
-----------------------------------------------------------------------
  0+ 5       0.0469      6.81  VQ        |         |         |         |
  0+10       0.1784     19.09  |V Q      |         |         |         |
  0+15       0.3493     24.82  |  VQ     |         |         |         |
  0+20       0.5336     26.76  |    Q    |         |         |         |
  0+25       0.7399     29.95  |    Q V  |         |         |         |
  0+30       0.9653     32.73  |     Q  V|         |         |         |
  0+35       1.2163     36.45  |      Q  |V        |         |         |
  0+40       1.5229     44.52  |       Q |   V     |         |         |
  0+45       1.9475     61.65  |         | Q      V|         |         |
  0+50       2.7639    118.54  |         |         |  Q   V  |         |
  0+55       3.5963    120.87  |         |         |   Q     |    V    |
  1+ 0       3.9266     47.96  |        Q|         |         |       V |
  1+ 5       4.0476     17.56  |  Q      |         |         |        V|
  1+10       4.0643      2.43  Q         |         |         |        V|
  1+15       4.0666      0.33  Q         |         |         |        V|
-----------------------------------------------------------------------
```

U n i t H y d r o g r a p h A n a l y s i s

Copyright (c) CIVILCADD/CIVILDESIGN, 1989 - 2008, Version 8.1
Study date 02/22/23 File: Area0624100.out

++

Riverside County Synthetic Unit Hydrology Method
RCFC & WCD Manual date - April 1978

Program License Serial Number 6094

English (in-lb) Input Units Used
English Rainfall Data (Inches) Input Values Used

English Units used in output format

JACKRABBIT TRAIL
DEVELOPED UNIT HYDROGRAPH ANALYSIS
AREA 06
100-YEAR

Drainage Area = 34.00(Ac.) = 0.053 Sq. Mi.
Drainage Area for Depth-Area Areal Adjustment = 34.00(Ac.) = 0.053 Sq. Mi.
Length along longest watercourse = 1710.80(Ft.)
Length along longest watercourse measured to centroid = 1365.80(Ft.)
Length along longest watercourse = 0.324 Mi.
Length along longest watercourse measured to centroid = 0.259 Mi.
Difference in elevation = 122.50(Ft.)
Slope along watercourse = 378.0687 Ft./Mi.
Average Manning's 'N' = 0.015
Lag time = 0.045 Hr.
Lag time = 2.73 Min.
25% of lag time = 0.68 Min.
40% of lag time = 1.09 Min.
Unit time = 5.00 Min.
Duration of storm = 24 Hour(s)
User Entered Base Flow = 0.00(CFS)

2 YEAR Area rainfall data:

```
Area(Ac.)[1]       Rainfall(In)[2]      Weighting[1*2]
       34.00            2.54                   86.36

100 YEAR Area rainfall data:


Area(Ac.)[1]       Rainfall(In)[2]      Weighting[1*2]
       34.00            6.18                  210.12

STORM EVENT (YEAR) =  100.00
Area Averaged 2-Year Rainfall =    2.540(In)
Area Averaged 100-Year Rainfall =    6.180(In)

Point rain (area averaged) =    6.180(In)
Areal adjustment factor =   99.99 %
Adjusted average point rain =    6.180(In)

Sub-Area Data:
Area(Ac.)         Runoff Index   Impervious %
    34.000           60.60         0.584
 Total Area Entered =     34.00(Ac.)


RI    RI   Infil. Rate Impervious   Adj. Infil. Rate  Area%     F
AMC2 AMC-3     (In/Hr)    (Dec.%)     (In/Hr)      (Dec.)    (In/Hr)
60.6  78.5      0.262     0.584        0.124       1.000      0.124
                                                 Sum (F) =   0.124
Area averaged mean soil loss (F) (In/Hr) =  0.124
Minimum soil loss rate ((In/Hr)) =  0.062
(for 24 hour storm duration)
Soil low loss rate (decimal) =   0.433
--------------------------------------------------------------------

                U n i t  H y d r o g r a p h
                        FOOTHILL S-Curve
-------------------------------------------------------------------
                Unit Hydrograph Data
--------------------------------------------------------------------
Unit time period   Time % of lag   Distribution   Unit Hydrograph
    (hrs)                           Graph %            (CFS)
--------------------------------------------------------------------
    1   0.083        183.398         38.785             13.290
    2   0.167        366.795         51.546             17.663
    3   0.250        550.193          8.138              2.789
    4   0.333        733.590          1.531              0.524
                                Sum = 100.000   Sum=      34.266
-------------------------------------------------------------------


 The following loss rate calculations reflect use of the minimum calculated
loss
 rate subtracted from the Storm Rain to produce the maximum Effective Rain
value
```

Unit	Time (Hr.)	Pattern Percent	Storm Rain (In/Hr)	Loss rate(In./Hr) Max	Low	Effective (In/Hr)
1	0.08	0.07	0.049	(0.220)	0.021	0.028
2	0.17	0.07	0.049	(0.219)	0.021	0.028
3	0.25	0.07	0.049	(0.219)	0.021	0.028
4	0.33	0.10	0.074	(0.218)	0.032	0.042
5	0.42	0.10	0.074	(0.217)	0.032	0.042
6	0.50	0.10	0.074	(0.216)	0.032	0.042
7	0.58	0.10	0.074	(0.215)	0.032	0.042
8	0.67	0.10	0.074	(0.214)	0.032	0.042
9	0.75	0.10	0.074	(0.214)	0.032	0.042
10	0.83	0.13	0.099	(0.213)	0.043	0.056
11	0.92	0.13	0.099	(0.212)	0.043	0.056
12	1.00	0.13	0.099	(0.211)	0.043	0.056
13	1.08	0.10	0.074	(0.210)	0.032	0.042
14	1.17	0.10	0.074	(0.209)	0.032	0.042
15	1.25	0.10	0.074	(0.209)	0.032	0.042
16	1.33	0.10	0.074	(0.208)	0.032	0.042
17	1.42	0.10	0.074	(0.207)	0.032	0.042
18	1.50	0.10	0.074	(0.206)	0.032	0.042
19	1.58	0.10	0.074	(0.205)	0.032	0.042
20	1.67	0.10	0.074	(0.204)	0.032	0.042
21	1.75	0.10	0.074	(0.204)	0.032	0.042
22	1.83	0.13	0.099	(0.203)	0.043	0.056
23	1.92	0.13	0.099	(0.202)	0.043	0.056
24	2.00	0.13	0.099	(0.201)	0.043	0.056
25	2.08	0.13	0.099	(0.200)	0.043	0.056
26	2.17	0.13	0.099	(0.199)	0.043	0.056
27	2.25	0.13	0.099	(0.199)	0.043	0.056
28	2.33	0.13	0.099	(0.198)	0.043	0.056
29	2.42	0.13	0.099	(0.197)	0.043	0.056
30	2.50	0.13	0.099	(0.196)	0.043	0.056
31	2.58	0.17	0.124	(0.195)	0.054	0.070
32	2.67	0.17	0.124	(0.195)	0.054	0.070
33	2.75	0.17	0.124	(0.194)	0.054	0.070
34	2.83	0.17	0.124	(0.193)	0.054	0.070
35	2.92	0.17	0.124	(0.192)	0.054	0.070
36	3.00	0.17	0.124	(0.191)	0.054	0.070
37	3.08	0.17	0.124	(0.191)	0.054	0.070
38	3.17	0.17	0.124	(0.190)	0.054	0.070
39	3.25	0.17	0.124	(0.189)	0.054	0.070
40	3.33	0.17	0.124	(0.188)	0.054	0.070
41	3.42	0.17	0.124	(0.188)	0.054	0.070
42	3.50	0.17	0.124	(0.187)	0.054	0.070
43	3.58	0.17	0.124	(0.186)	0.054	0.070
44	3.67	0.17	0.124	(0.185)	0.054	0.070
45	3.75	0.17	0.124	(0.184)	0.054	0.070
46	3.83	0.20	0.148	(0.184)	0.064	0.084
47	3.92	0.20	0.148	(0.183)	0.064	0.084
48	4.00	0.20	0.148	(0.182)	0.064	0.084
49	4.08	0.20	0.148	(0.181)	0.064	0.084
50	4.17	0.20	0.148	(0.181)	0.064	0.084
51	4.25	0.20	0.148	(0.180)	0.064	0.084
52	4.33	0.23	0.173	(0.179)	0.075	0.098

53	4.42	0.23	0.173	(0.178)	0.075	0.098
54	4.50	0.23	0.173	(0.177)	0.075	0.098
55	4.58	0.23	0.173	(0.177)	0.075	0.098
56	4.67	0.23	0.173	(0.176)	0.075	0.098
57	4.75	0.23	0.173	(0.175)	0.075	0.098
58	4.83	0.27	0.198	(0.174)	0.086	0.112
59	4.92	0.27	0.198	(0.174)	0.086	0.112
60	5.00	0.27	0.198	(0.173)	0.086	0.112
61	5.08	0.20	0.148	(0.172)	0.064	0.084
62	5.17	0.20	0.148	(0.171)	0.064	0.084
63	5.25	0.20	0.148	(0.171)	0.064	0.084
64	5.33	0.23	0.173	(0.170)	0.075	0.098
65	5.42	0.23	0.173	(0.169)	0.075	0.098
66	5.50	0.23	0.173	(0.168)	0.075	0.098
67	5.58	0.27	0.198	(0.168)	0.086	0.112
68	5.67	0.27	0.198	(0.167)	0.086	0.112
69	5.75	0.27	0.198	(0.166)	0.086	0.112
70	5.83	0.27	0.198	(0.165)	0.086	0.112
71	5.92	0.27	0.198	(0.165)	0.086	0.112
72	6.00	0.27	0.198	(0.164)	0.086	0.112
73	6.08	0.30	0.222	(0.163)	0.096	0.126
74	6.17	0.30	0.222	(0.163)	0.096	0.126
75	6.25	0.30	0.222	(0.162)	0.096	0.126
76	6.33	0.30	0.222	(0.161)	0.096	0.126
77	6.42	0.30	0.222	(0.160)	0.096	0.126
78	6.50	0.30	0.222	(0.160)	0.096	0.126
79	6.58	0.33	0.247	(0.159)	0.107	0.140
80	6.67	0.33	0.247	(0.158)	0.107	0.140
81	6.75	0.33	0.247	(0.158)	0.107	0.140
82	6.83	0.33	0.247	(0.157)	0.107	0.140
83	6.92	0.33	0.247	(0.156)	0.107	0.140
84	7.00	0.33	0.247	(0.155)	0.107	0.140
85	7.08	0.33	0.247	(0.155)	0.107	0.140
86	7.17	0.33	0.247	(0.154)	0.107	0.140
87	7.25	0.33	0.247	(0.153)	0.107	0.140
88	7.33	0.37	0.272	(0.153)	0.118	0.154
89	7.42	0.37	0.272	(0.152)	0.118	0.154
90	7.50	0.37	0.272	(0.151)	0.118	0.154
91	7.58	0.40	0.297	(0.151)	0.128	0.168
92	7.67	0.40	0.297	(0.150)	0.128	0.168
93	7.75	0.40	0.297	(0.149)	0.128	0.168
94	7.83	0.43	0.321	(0.148)	0.139	0.182
95	7.92	0.43	0.321	(0.148)	0.139	0.182
96	8.00	0.43	0.321	(0.147)	0.139	0.182
97	8.08	0.50	0.371	0.146	(0.161)	0.224
98	8.17	0.50	0.371	0.146	(0.161)	0.225
99	8.25	0.50	0.371	0.145	(0.161)	0.226
100	8.33	0.50	0.371	0.144	(0.161)	0.226
101	8.42	0.50	0.371	0.144	(0.161)	0.227
102	8.50	0.50	0.371	0.143	(0.161)	0.228
103	8.58	0.53	0.395	0.142	(0.171)	0.253
104	8.67	0.53	0.395	0.142	(0.171)	0.254
105	8.75	0.53	0.395	0.141	(0.171)	0.255
106	8.83	0.57	0.420	0.140	(0.182)	0.280

107	8.92	0.57	0.420	0.140	(0.182)	0.281
108	9.00	0.57	0.420	0.139	(0.182)	0.281
109	9.08	0.63	0.470	0.138	(0.203)	0.331
110	9.17	0.63	0.470	0.138	(0.203)	0.332
111	9.25	0.63	0.470	0.137	(0.203)	0.333
112	9.33	0.67	0.494	0.136	(0.214)	0.358
113	9.42	0.67	0.494	0.136	(0.214)	0.359
114	9.50	0.67	0.494	0.135	(0.214)	0.359
115	9.58	0.70	0.519	0.134	(0.225)	0.385
116	9.67	0.70	0.519	0.134	(0.225)	0.385
117	9.75	0.70	0.519	0.133	(0.225)	0.386
118	9.83	0.73	0.544	0.132	(0.235)	0.411
119	9.92	0.73	0.544	0.132	(0.235)	0.412
120	10.00	0.73	0.544	0.131	(0.235)	0.413
121	10.08	0.50	0.371	0.131	(0.161)	0.240
122	10.17	0.50	0.371	0.130	(0.161)	0.241
123	10.25	0.50	0.371	0.129	(0.161)	0.241
124	10.33	0.50	0.371	0.129	(0.161)	0.242
125	10.42	0.50	0.371	0.128	(0.161)	0.243
126	10.50	0.50	0.371	0.127	(0.161)	0.243
127	10.58	0.67	0.494	0.127	(0.214)	0.368
128	10.67	0.67	0.494	0.126	(0.214)	0.368
129	10.75	0.67	0.494	0.126	(0.214)	0.369
130	10.83	0.67	0.494	0.125	(0.214)	0.369
131	10.92	0.67	0.494	0.124	(0.214)	0.370
132	11.00	0.67	0.494	0.124	(0.214)	0.371
133	11.08	0.63	0.470	0.123	(0.203)	0.347
134	11.17	0.63	0.470	0.123	(0.203)	0.347
135	11.25	0.63	0.470	0.122	(0.203)	0.348
136	11.33	0.63	0.470	0.121	(0.203)	0.348
137	11.42	0.63	0.470	0.121	(0.203)	0.349
138	11.50	0.63	0.470	0.120	(0.203)	0.350
139	11.58	0.57	0.420	0.120	(0.182)	0.301
140	11.67	0.57	0.420	0.119	(0.182)	0.301
141	11.75	0.57	0.420	0.118	(0.182)	0.302
142	11.83	0.60	0.445	0.118	(0.193)	0.327
143	11.92	0.60	0.445	0.117	(0.193)	0.328
144	12.00	0.60	0.445	0.117	(0.193)	0.328
145	12.08	0.83	0.618	0.116	(0.268)	0.502
146	12.17	0.83	0.618	0.115	(0.268)	0.503
147	12.25	0.83	0.618	0.115	(0.268)	0.503
148	12.33	0.87	0.643	0.114	(0.278)	0.528
149	12.42	0.87	0.643	0.114	(0.278)	0.529
150	12.50	0.87	0.643	0.113	(0.278)	0.530
151	12.58	0.93	0.692	0.113	(0.300)	0.580
152	12.67	0.93	0.692	0.112	(0.300)	0.580
153	12.75	0.93	0.692	0.111	(0.300)	0.581
154	12.83	0.97	0.717	0.111	(0.310)	0.606
155	12.92	0.97	0.717	0.110	(0.310)	0.607
156	13.00	0.97	0.717	0.110	(0.310)	0.607
157	13.08	1.13	0.840	0.109	(0.364)	0.731
158	13.17	1.13	0.840	0.109	(0.364)	0.732
159	13.25	1.13	0.840	0.108	(0.364)	0.732
160	13.33	1.13	0.840	0.108	(0.364)	0.733

161	13.42	1.13	0.840	0.107	(0.364)	0.733
162	13.50	1.13	0.840	0.106	(0.364)	0.734
163	13.58	0.77	0.569	0.106	(0.246)	0.463
164	13.67	0.77	0.569	0.105	(0.246)	0.463
165	13.75	0.77	0.569	0.105	(0.246)	0.464
166	13.83	0.77	0.569	0.104	(0.246)	0.464
167	13.92	0.77	0.569	0.104	(0.246)	0.465
168	14.00	0.77	0.569	0.103	(0.246)	0.465
169	14.08	0.90	0.667	0.103	(0.289)	0.565
170	14.17	0.90	0.667	0.102	(0.289)	0.565
171	14.25	0.90	0.667	0.102	(0.289)	0.566
172	14.33	0.87	0.643	0.101	(0.278)	0.542
173	14.42	0.87	0.643	0.101	(0.278)	0.542
174	14.50	0.87	0.643	0.100	(0.278)	0.543
175	14.58	0.87	0.643	0.100	(0.278)	0.543
176	14.67	0.87	0.643	0.099	(0.278)	0.544
177	14.75	0.87	0.643	0.099	(0.278)	0.544
178	14.83	0.83	0.618	0.098	(0.268)	0.520
179	14.92	0.83	0.618	0.098	(0.268)	0.520
180	15.00	0.83	0.618	0.097	(0.268)	0.521
181	15.08	0.80	0.593	0.097	(0.257)	0.497
182	15.17	0.80	0.593	0.096	(0.257)	0.497
183	15.25	0.80	0.593	0.096	(0.257)	0.498
184	15.33	0.77	0.569	0.095	(0.246)	0.473
185	15.42	0.77	0.569	0.095	(0.246)	0.474
186	15.50	0.77	0.569	0.094	(0.246)	0.474
187	15.58	0.63	0.470	0.094	(0.203)	0.376
188	15.67	0.63	0.470	0.093	(0.203)	0.377
189	15.75	0.63	0.470	0.093	(0.203)	0.377
190	15.83	0.63	0.470	0.092	(0.203)	0.377
191	15.92	0.63	0.470	0.092	(0.203)	0.378
192	16.00	0.63	0.470	0.091	(0.203)	0.378
193	16.08	0.13	0.099	(0.091)	0.043	0.056
194	16.17	0.13	0.099	(0.090)	0.043	0.056
195	16.25	0.13	0.099	(0.090)	0.043	0.056
196	16.33	0.13	0.099	(0.089)	0.043	0.056
197	16.42	0.13	0.099	(0.089)	0.043	0.056
198	16.50	0.13	0.099	(0.088)	0.043	0.056
199	16.58	0.10	0.074	(0.088)	0.032	0.042
200	16.67	0.10	0.074	(0.088)	0.032	0.042
201	16.75	0.10	0.074	(0.087)	0.032	0.042
202	16.83	0.10	0.074	(0.087)	0.032	0.042
203	16.92	0.10	0.074	(0.086)	0.032	0.042
204	17.00	0.10	0.074	(0.086)	0.032	0.042
205	17.08	0.17	0.124	(0.085)	0.054	0.070
206	17.17	0.17	0.124	(0.085)	0.054	0.070
207	17.25	0.17	0.124	(0.085)	0.054	0.070
208	17.33	0.17	0.124	(0.084)	0.054	0.070
209	17.42	0.17	0.124	(0.084)	0.054	0.070
210	17.50	0.17	0.124	(0.083)	0.054	0.070
211	17.58	0.17	0.124	(0.083)	0.054	0.070
212	17.67	0.17	0.124	(0.082)	0.054	0.070
213	17.75	0.17	0.124	(0.082)	0.054	0.070
214	17.83	0.13	0.099	(0.082)	0.043	0.056

215	17.92	0.13	0.099	(0.081)	0.043	0.056
216	18.00	0.13	0.099	(0.081)	0.043	0.056
217	18.08	0.13	0.099	(0.080)	0.043	0.056
218	18.17	0.13	0.099	(0.080)	0.043	0.056
219	18.25	0.13	0.099	(0.080)	0.043	0.056
220	18.33	0.13	0.099	(0.079)	0.043	0.056
221	18.42	0.13	0.099	(0.079)	0.043	0.056
222	18.50	0.13	0.099	(0.078)	0.043	0.056
223	18.58	0.10	0.074	(0.078)	0.032	0.042
224	18.67	0.10	0.074	(0.078)	0.032	0.042
225	18.75	0.10	0.074	(0.077)	0.032	0.042
226	18.83	0.07	0.049	(0.077)	0.021	0.028
227	18.92	0.07	0.049	(0.077)	0.021	0.028
228	19.00	0.07	0.049	(0.076)	0.021	0.028
229	19.08	0.10	0.074	(0.076)	0.032	0.042
230	19.17	0.10	0.074	(0.076)	0.032	0.042
231	19.25	0.10	0.074	(0.075)	0.032	0.042
232	19.33	0.13	0.099	(0.075)	0.043	0.056
233	19.42	0.13	0.099	(0.074)	0.043	0.056
234	19.50	0.13	0.099	(0.074)	0.043	0.056
235	19.58	0.10	0.074	(0.074)	0.032	0.042
236	19.67	0.10	0.074	(0.073)	0.032	0.042
237	19.75	0.10	0.074	(0.073)	0.032	0.042
238	19.83	0.07	0.049	(0.073)	0.021	0.028
239	19.92	0.07	0.049	(0.072)	0.021	0.028
240	20.00	0.07	0.049	(0.072)	0.021	0.028
241	20.08	0.10	0.074	(0.072)	0.032	0.042
242	20.17	0.10	0.074	(0.072)	0.032	0.042
243	20.25	0.10	0.074	(0.071)	0.032	0.042
244	20.33	0.10	0.074	(0.071)	0.032	0.042
245	20.42	0.10	0.074	(0.071)	0.032	0.042
246	20.50	0.10	0.074	(0.070)	0.032	0.042
247	20.58	0.10	0.074	(0.070)	0.032	0.042
248	20.67	0.10	0.074	(0.070)	0.032	0.042
249	20.75	0.10	0.074	(0.069)	0.032	0.042
250	20.83	0.07	0.049	(0.069)	0.021	0.028
251	20.92	0.07	0.049	(0.069)	0.021	0.028
252	21.00	0.07	0.049	(0.069)	0.021	0.028
253	21.08	0.10	0.074	(0.068)	0.032	0.042
254	21.17	0.10	0.074	(0.068)	0.032	0.042
255	21.25	0.10	0.074	(0.068)	0.032	0.042
256	21.33	0.07	0.049	(0.068)	0.021	0.028
257	21.42	0.07	0.049	(0.067)	0.021	0.028
258	21.50	0.07	0.049	(0.067)	0.021	0.028
259	21.58	0.10	0.074	(0.067)	0.032	0.042
260	21.67	0.10	0.074	(0.067)	0.032	0.042
261	21.75	0.10	0.074	(0.066)	0.032	0.042
262	21.83	0.07	0.049	(0.066)	0.021	0.028
263	21.92	0.07	0.049	(0.066)	0.021	0.028
264	22.00	0.07	0.049	(0.066)	0.021	0.028
265	22.08	0.10	0.074	(0.065)	0.032	0.042
266	22.17	0.10	0.074	(0.065)	0.032	0.042
267	22.25	0.10	0.074	(0.065)	0.032	0.042
268	22.33	0.07	0.049	(0.065)	0.021	0.028

269	22.42	0.07	0.049	(0.065)	0.021	0.028
270	22.50	0.07	0.049	(0.064)	0.021	0.028
271	22.58	0.07	0.049	(0.064)	0.021	0.028
272	22.67	0.07	0.049	(0.064)	0.021	0.028
273	22.75	0.07	0.049	(0.064)	0.021	0.028
274	22.83	0.07	0.049	(0.064)	0.021	0.028
275	22.92	0.07	0.049	(0.064)	0.021	0.028
276	23.00	0.07	0.049	(0.063)	0.021	0.028
277	23.08	0.07	0.049	(0.063)	0.021	0.028
278	23.17	0.07	0.049	(0.063)	0.021	0.028
279	23.25	0.07	0.049	(0.063)	0.021	0.028
280	23.33	0.07	0.049	(0.063)	0.021	0.028
281	23.42	0.07	0.049	(0.063)	0.021	0.028
282	23.50	0.07	0.049	(0.063)	0.021	0.028
283	23.58	0.07	0.049	(0.062)	0.021	0.028
284	23.67	0.07	0.049	(0.062)	0.021	0.028
285	23.75	0.07	0.049	(0.062)	0.021	0.028
286	23.83	0.07	0.049	(0.062)	0.021	0.028
287	23.92	0.07	0.049	(0.062)	0.021	0.028
288	24.00	0.07	0.049	(0.062)	0.021	0.028

(Loss Rate Not Used)

Sum = 100.0 Sum = 53.2

Flood volume = Effective rainfall 4.44(In)
times area 34.0(Ac.)/[(In)/(Ft.)] = 12.6(Ac.Ft)
Total soil loss = 1.74(In)
Total soil loss = 4.937(Ac.Ft)
Total rainfall = 6.18(In)
Flood volume = 547617.3 Cubic Feet
Total soil loss = 215067.6 Cubic Feet

Peak flow rate of this hydrograph = 25.150(CFS)

++

24 - H O U R S T O R M
R u n o f f H y d r o g r a p h

Hydrograph in 5 Minute intervals ((CFS))

Time(h+m)	Volume Ac.Ft	Q(CFS)	0	7.5	15.0	22.5	30.0
0+ 5	0.0026	0.37	Q	|	|	|	|
0+10	0.0085	0.87	VQ	|	|	|	|
0+15	0.0151	0.95	VQ	|	|	|	|
0+20	0.0230	1.15	VQ	|	|	|	|
0+25	0.0326	1.40	VQ	|	|	|	|
0+30	0.0424	1.43	VQ	|	|	|	|
0+35	0.0524	1.44	VQ	|	|	|	|
0+40	0.0623	1.44	VQ	|	|	|	|
0+45	0.0722	1.44	VQ	|	|	|	|
0+50	0.0834	1.63	V Q	|	|	|	|
0+55	0.0964	1.88	V Q	|	|	|	|
1+ 0	0.1095	1.91	V Q	|	|	|	|
1+ 5	0.1215	1.74	V Q	|	|	|	|

```
1+10       0.1317      1.49  VQ        |          |          |          |
1+15       0.1417      1.45  VQ        |          |          |          |
1+20       0.1517      1.44  VQ        |          |          |          |
1+25       0.1616      1.44  VQ        |          |          |          |
1+30       0.1715      1.44  VQ        |          |          |          |
1+35       0.1814      1.44  VQ        |          |          |          |
1+40       0.1914      1.44  VQ        |          |          |          |
1+45       0.2013      1.44  VQ        |          |          |          |
1+50       0.2125      1.63  V Q       |          |          |          |
1+55       0.2254      1.88  V Q       |          |          |          |
2+ 0       0.2386      1.91  V Q       |          |          |          |
2+ 5       0.2518      1.92  V Q       |          |          |          |
2+10       0.2651      1.92  V Q       |          |          |          |
2+15       0.2783      1.92  V Q       |          |          |          |
2+20       0.2915      1.92  V Q       |          |          |          |
2+25       0.3048      1.92  V Q       |          |          |          |
2+30       0.3180      1.92  |VQ       |          |          |          |
2+35       0.3325      2.11  |VQ       |          |          |          |
2+40       0.3488      2.36  |V Q      |          |          |          |
2+45       0.3653      2.40  |V Q      |          |          |          |
2+50       0.3818      2.40  |V Q      |          |          |          |
2+55       0.3984      2.40  |V Q      |          |          |          |
3+ 0       0.4149      2.40  |V Q      |          |          |          |
3+ 5       0.4314      2.40  |V Q      |          |          |          |
3+10       0.4480      2.40  |V Q      |          |          |          |
3+15       0.4645      2.40  |V Q      |          |          |          |
3+20       0.4811      2.40  |V Q      |          |          |          |
3+25       0.4976      2.40  |V Q      |          |          |          |
3+30       0.5142      2.40  |V Q      |          |          |          |
3+35       0.5307      2.40  |V Q      |          |          |          |
3+40       0.5473      2.40  |V Q      |          |          |          |
3+45       0.5638      2.40  |V Q      |          |          |          |
3+50       0.5816      2.59  |V Q      |          |          |          |
3+55       0.6012      2.84  |V Q      |          |          |          |
4+ 0       0.6210      2.88  |V Q      |          |          |          |
4+ 5       0.6408      2.88  | VQ      |          |          |          |
4+10       0.6607      2.88  | VQ      |          |          |          |
4+15       0.6805      2.88  | VQ      |          |          |          |
4+20       0.7017      3.07  | V Q     |          |          |          |
4+25       0.7245      3.32  | V Q     |          |          |          |
4+30       0.7476      3.36  | V Q     |          |          |          |
4+35       0.7708      3.36  | V Q     |          |          |          |
4+40       0.7940      3.36  | V Q     |          |          |          |
4+45       0.8171      3.36  | V Q     |          |          |          |
4+50       0.8416      3.55  | V Q     |          |          |          |
4+55       0.8677      3.80  | V  Q    |          |          |          |
5+ 0       0.8942      3.84  | V  Q    |          |          |          |
5+ 5       0.9181      3.47  | V Q     |          |          |          |
5+10       0.9386      2.98  | VQ      |          |          |          |
5+15       0.9585      2.90  |  Q      |          |          |          |
5+20       0.9797      3.07  |  VQ     |          |          |          |
5+25       1.0025      3.32  |  VQ     |          |          |          |
5+30       1.0256      3.36  |  VQ     |          |          |          |
5+35       1.0501      3.55  |  VQ     |          |          |          |
```

```
 5+40       1.0762      3.80  |  V Q    |         |         |         |
 5+45       1.1026      3.84  |  V Q    |         |         |         |
 5+50       1.1291      3.84  |  V Q    |         |         |         |
 5+55       1.1556      3.84  |  V Q    |         |         |         |
 6+ 0       1.1821      3.84  |  V Q    |         |         |         |
 6+ 5       1.2098      4.03  |  V Q    |         |         |         |
 6+10       1.2393      4.28  |  V Q    |         |         |         |
 6+15       1.2690      4.32  |   VQ    |         |         |         |
 6+20       1.2988      4.32  |   VQ    |         |         |         |
 6+25       1.3286      4.32  |   VQ    |         |         |         |
 6+30       1.3584      4.32  |   VQ    |         |         |         |
 6+35       1.3894      4.51  |   V Q   |         |         |         |
 6+40       1.4222      4.76  |   V Q   |         |         |         |
 6+45       1.4552      4.80  |   V Q   |         |         |         |
 6+50       1.4883      4.80  |   V Q   |         |         |         |
 6+55       1.5214      4.80  |   V Q   |         |         |         |
 7+ 0       1.5545      4.80  |   V Q   |         |         |         |
 7+ 5       1.5876      4.80  |    VQ   |         |         |         |
 7+10       1.6207      4.80  |    VQ   |         |         |         |
 7+15       1.6538      4.80  |    VQ   |         |         |         |
 7+20       1.6882      4.99  |    VQ   |         |         |         |
 7+25       1.7242      5.24  |    VQ   |         |         |         |
 7+30       1.7606      5.28  |    V Q  |         |         |         |
 7+35       1.7983      5.47  |    V Q  |         |         |         |
 7+40       1.8377      5.72  |    V Q  |         |         |         |
 7+45       1.8773      5.76  |    V Q  |         |         |         |
 7+50       1.9183      5.95  |     VQ  |         |         |         |
 7+55       1.9610      6.20  |     V Q |         |         |         |
 8+ 0       2.0040      6.24  |     V Q |         |         |         |
 8+ 5       2.0509      6.81  |     V  Q|         |         |         |
 8+10       2.1030      7.56  |     V   Q         |         |         |
 8+15       2.1560      7.70  |     V   Q         |         |         |
 8+20       2.2093      7.75  |      V  Q         |         |         |
 8+25       2.2628      7.77  |      V  Q         |         |         |
 8+30       2.3165      7.79  |      V  Q         |         |         |
 8+35       2.3726      8.14  |      V  Q         |         |         |
 8+40       2.4319      8.60  |      V  |Q        |         |         |
 8+45       2.4917      8.70  |      V  |Q        |         |         |
 8+50       2.5541      9.06  |       V | Q       |         |         |
 8+55       2.6197      9.52  |       V | Q       |         |         |
 9+ 0       2.6859      9.61  |       V | Q       |         |         |
 9+ 5       2.7569     10.30  |       V |  Q      |         |         |
 9+10       2.8340     11.20  |        V|   Q     |         |         |
 9+15       2.9123     11.36  |        V|    Q    |         |         |
 9+20       2.9931     11.74  |        V|    Q    |         |         |
 9+25       3.0771     12.20  |        V|     Q   |         |         |
 9+30       3.1617     12.29  |         V     Q   |         |         |
 9+35       3.2489     12.65  |         V     Q   |         |         |
 9+40       3.3392     13.11  |         V      Q  |         |         |
 9+45       3.4301     13.20  |         V      Q  |         |         |
 9+50       3.5235     13.57  |         |V      Q |         |         |
 9+55       3.6201     14.03  |         |V      Q |         |         |
10+ 0       3.7174     14.12  |         |V      Q |         |         |
10+ 5       3.7990     11.85  |         | V  Q    |         |         |
```

```
10+10       3.8597      8.81  |          |QV        |          |          |
10+15       3.9172      8.35  |          |QV        |          |          |
10+20       3.9742      8.28  |          |QV        |          |          |
10+25       4.0314      8.31  |          |QV        |          |          |
10+30       4.0888      8.33  |          |Q V       |          |          |
10+35       4.1576      9.99  |          |  Q       |          |          |
10+40       4.2416     12.20  |          |  V  Q    |          |          |
10+45       4.3281     12.56  |          |  V  Q    |          |          |
10+50       4.4152     12.65  |          |   V Q    |          |          |
10+55       4.5025     12.67  |          |   V Q    |          |          |
11+ 0       4.5899     12.69  |          |   V Q    |          |          |
11+ 5       4.6752     12.38  |          |   V Q    |          |          |
11+10       4.7576     11.97  |          |    Q     |          |          |
11+15       4.8397     11.92  |          |    Q     |          |          |
11+20       4.9218     11.93  |          |    Q     |          |          |
11+25       5.0041     11.95  |          |    Q     |          |          |
11+30       5.0865     11.97  |          |    QV    |          |          |
11+35       5.1646     11.33  |          |    QV    |          |          |
11+40       5.2367     10.48  |          |  Q  V    |          |          |
11+45       5.3081     10.36  |          |  Q  V    |          |          |
11+50       5.3817     10.68  |          |   Q  V   |          |          |
11+55       5.4584     11.14  |          |   Q  V   |          |          |
12+ 0       5.5357     11.23  |          |   Q  V   |          |          |
12+ 5       5.6291     13.56  |          |      VQ  |          |          |
12+10       5.7437     16.64  |          |       V  | Q        |          |
12+15       5.8618     17.14  |          |       V  | Q        |          |
12+20       5.9829     17.58  |          |        V|  Q       |          |
12+25       6.1071     18.04  |          |        V|   Q      |          |
12+30       6.2320     18.13  |          |        V|   Q      |          |
12+35       6.3616     18.82  |          |         V    Q     |          |
12+40       6.4973     19.71  |          |         V     Q    |          |
12+45       6.6342     19.87  |          |         |V    Q    |          |
12+50       6.7736     20.24  |          |         |V    Q    |          |
12+55       6.9161     20.70  |          |         | V    Q   |          |
13+ 0       7.0593     20.79  |          |         | V    Q   |          |
13+ 5       7.2140     22.46  |          |         | V      Q|          |
13+10       7.3839     24.67  |          |         |  V       | Q        |
13+15       7.5562     25.03  |          |         |   V      |  Q       |
13+20       7.7292     25.11  |          |         |   V      |  Q       |
13+25       7.9023     25.13  |          |         |    V     |  Q       |
13+30       8.0755     25.15  |          |         |    V     |  Q       |
13+35       8.2239     21.55  |          |         |     V Q  |          |
13+40       8.3394     16.77  |          |         | Q   V    |          |
13+45       8.4498     16.03  |          |         |Q    V    |          |
13+50       8.5593     15.90  |          |         |Q     V   |          |
13+55       8.6689     15.92  |          |         |Q     V   |          |
14+ 0       8.7787     15.94  |          |         |Q     V   |          |
14+ 5       8.8977     17.27  |          |         |  Q    V  |          |
14+10       9.0288     19.04  |          |         |    Q  V  |          |
14+15       9.1619     19.33  |          |         |    Q   V|          |
14+20       9.2933     19.07  |          |         |    Q   V|          |
14+25       9.4217     18.65  |          |         |   Q    V|          |
14+30       9.5498     18.60  |          |         |   Q     V          |
14+35       9.6780     18.61  |          |         |   Q     V          |
```

```
14+40       9.8062     18.62  |          |          |   Q      |V         |
14+45       9.9346     18.64  |          |          |   Q      |V         |
14+50      10.0609     18.33  |          |          |   Q      | V        |
14+55      10.1842     17.91  |          |          |  Q       | V        |
15+ 0      10.3072     17.86  |          |          |  Q       | V        |
15+ 5      10.4280     17.53  |          |          |  Q       |  V       |
15+10      10.5458     17.11  |          |          | Q        |  V       |
15+15      10.6634     17.06  |          |          | Q        |  V       |
15+20      10.7786     16.74  |          |          | Q        |   V      |
15+25      10.8910     16.32  |          |          |Q         |   V      |
15+30      11.0030     16.27  |          |          |Q         |    V     |
15+35      11.1060     14.95  |          |        Q|          |    V     |
15+40      11.1971     13.22  |          |      Q  |          |    V     |
15+45      11.2864     12.96  |          |      Q  |          |    V     |
15+50      11.3754     12.93  |          |      Q  |          |     V    |
15+55      11.4646     12.94  |          |      Q  |          |     V    |
16+ 0      11.5538     12.96  |          |      Q  |          |     V    |
16+ 5      11.6137      8.68  |          |Q        |          |     V    |
16+10      11.6342      2.99  |  Q       |          |          |      V   |
16+15      11.6486      2.09  | Q        |          |          |      V   |
16+20      11.6619      1.92  | Q        |          |          |      V   |
16+25      11.6751      1.92  | Q        |          |          |      V   |
16+30      11.6884      1.92  | Q        |          |          |      V   |
16+35      11.7003      1.74  | Q        |          |          |      V   |
16+40      11.7106      1.49  |Q         |          |          |      V   |
16+45      11.7205      1.45  |Q         |          |          |      V   |
16+50      11.7305      1.44  |Q         |          |          |      V   |
16+55      11.7404      1.44  |Q         |          |          |      V   |
17+ 0      11.7503      1.44  |Q         |          |          |      V   |
17+ 5      11.7628      1.81  | Q        |          |          |      V   |
17+10      11.7787      2.31  |  Q       |          |          |      V   |
17+15      11.7952      2.39  |  Q       |          |          |      V   |
17+20      11.8117      2.40  |  Q       |          |          |      V   |
17+25      11.8283      2.40  |  Q       |          |          |      V   |
17+30      11.8448      2.40  |  Q       |          |          |      V   |
17+35      11.8613      2.40  |  Q       |          |          |      V   |
17+40      11.8779      2.40  |  Q       |          |          |      V   |
17+45      11.8944      2.40  |  Q       |          |          |      V   |
17+50      11.9097      2.22  | Q        |          |          |      V   |
17+55      11.9233      1.97  | Q        |          |          |      V   |
18+ 0      11.9365      1.93  | Q        |          |          |      V   |
18+ 5      11.9498      1.92  | Q        |          |          |       V  |
18+10      11.9630      1.92  | Q        |          |          |       V  |
18+15      11.9763      1.92  | Q        |          |          |       V  |
18+20      11.9895      1.92  | Q        |          |          |       V  |
18+25      12.0027      1.92  | Q        |          |          |       V  |
18+30      12.0160      1.92  | Q        |          |          |       V  |
18+35      12.0279      1.74  | Q        |          |          |       V  |
18+40      12.0382      1.49  |Q         |          |          |       V  |
18+45      12.0481      1.45  |Q         |          |          |       V  |
18+50      12.0568      1.26  |Q         |          |          |       V  |
18+55      12.0637      1.01  |Q         |          |          |       V  |
19+ 0      12.0704      0.97  |Q         |          |          |       V  |
19+ 5      12.0783      1.15  |Q         |          |          |       V  |
```

```
19+10      12.0879      1.40  |Q         |          |          |        V |
19+15      12.0978      1.43  |Q         |          |          |        V |
19+20      12.1090      1.63  | Q        |          |          |        V |
19+25      12.1219      1.88  | Q        |          |          |        V |
19+30      12.1351      1.91  | Q        |          |          |        V |
19+35      12.1470      1.74  | Q        |          |          |        V |
19+40      12.1573      1.49  |Q         |          |          |        V |
19+45      12.1673      1.45  |Q         |          |          |        V |
19+50      12.1759      1.26  |Q         |          |          |        V |
19+55      12.1829      1.01  |Q         |          |          |        V |
20+ 0      12.1895      0.97  |Q         |          |          |        V |
20+ 5      12.1974      1.15  |Q         |          |          |        V |
20+10      12.2070      1.40  |Q         |          |          |        V |
20+15      12.2169      1.43  |Q         |          |          |        V |
20+20      12.2268      1.44  |Q         |          |          |        V |
20+25      12.2368      1.44  |Q         |          |          |        V |
20+30      12.2467      1.44  |Q         |          |          |        V |
20+35      12.2566      1.44  |Q         |          |          |        V |
20+40      12.2665      1.44  |Q         |          |          |         V|
20+45      12.2765      1.44  |Q         |          |          |         V|
20+50      12.2851      1.26  |Q         |          |          |         V|
20+55      12.2921      1.01  |Q         |          |          |         V|
21+ 0      12.2987      0.97  |Q         |          |          |         V|
21+ 5      12.3066      1.15  |Q         |          |          |         V|
21+10      12.3162      1.40  |Q         |          |          |         V|
21+15      12.3261      1.43  |Q         |          |          |         V|
21+20      12.3348      1.26  |Q         |          |          |         V|
21+25      12.3417      1.01  |Q         |          |          |         V|
21+30      12.3484      0.97  |Q         |          |          |         V|
21+35      12.3563      1.15  |Q         |          |          |         V|
21+40      12.3659      1.40  |Q         |          |          |         V|
21+45      12.3758      1.43  |Q         |          |          |         V|
21+50      12.3844      1.26  |Q         |          |          |         V|
21+55      12.3913      1.01  |Q         |          |          |         V|
22+ 0      12.3980      0.97  |Q         |          |          |         V|
22+ 5      12.4059      1.15  |Q         |          |          |         V|
22+10      12.4155      1.40  |Q         |          |          |         V|
22+15      12.4254      1.43  |Q         |          |          |         V|
22+20      12.4340      1.26  |Q         |          |          |         V|
22+25      12.4410      1.01  |Q         |          |          |         V|
22+30      12.4476      0.97  |Q         |          |          |         V|
22+35      12.4543      0.96  |Q         |          |          |         V|
22+40      12.4609      0.96  |Q         |          |          |         V|
22+45      12.4675      0.96  |Q         |          |          |         V|
22+50      12.4741      0.96  |Q         |          |          |         V|
22+55      12.4807      0.96  |Q         |          |          |         V|
23+ 0      12.4874      0.96  |Q         |          |          |         V|
23+ 5      12.4940      0.96  |Q         |          |          |         V|
23+10      12.5006      0.96  |Q         |          |          |         V|
23+15      12.5072      0.96  |Q         |          |          |         V|
23+20      12.5138      0.96  |Q         |          |          |         V|
23+25      12.5204      0.96  |Q         |          |          |         V|
23+30      12.5271      0.96  |Q         |          |          |         V|
23+35      12.5337      0.96  |Q         |          |          |         V|
```

```
   23+40      12.5403      0.96  |Q        |         |         |        V|
   23+45      12.5469      0.96  |Q        |         |         |        V|
   23+50      12.5535      0.96  |Q        |         |         |        V|
   23+55      12.5602      0.96  |Q        |         |         |        V|
   24+ 0      12.5668      0.96  |Q        |         |         |        V|
   24+ 5      12.5708      0.59  Q         |         |         |        V|
   24+10      12.5715      0.09  Q         |         |         |        V|
   24+15      12.5716      0.01  Q         |         |         |        V|
-----------------------------------------------------------------------
```

```
      U n i t   H y d r o g r a p h   A n a l y s i s

      Copyright (c) CIVILCADD/CIVILDESIGN, 1989 - 2008, Version 8.1
            Study date  11/09/20 File: AREA131100.out


++++++++++++++++++++++++++++++++++++++++++++++++++++++++++++++++++++++
----------------------------------------------------------------------

Riverside County Synthetic Unit Hydrology Method
RCFC & WCD Manual date - April 1978


Program License Serial Number 6094

-------------------------------------------------------------------
 English (in-lb) Input Units Used
 English Rainfall Data (Inches) Input Values Used

 English Units used in output format



-------------------------------------------------------------------
BEAUMONT POINTE
DEVELOPED UNIT HYDROGRAPH ANALYSIS
AREA 13
100-YEAR
-------------------------------------------------------------------
Drainage Area =      88.72(Ac.)  =      0.139 Sq. Mi.
Drainage Area for Depth-Area Areal Adjustment =      88.72(Ac.)  =      0.139
Sq. Mi.
Length along longest watercourse =    2709.80(Ft.)
Length along longest watercourse measured to centroid =    2303.80(Ft.)
Length along longest watercourse =      0.513 Mi.
Length along longest watercourse measured to centroid =      0.436 Mi.
Difference in elevation =      32.80(Ft.)
Slope along watercourse =     63.9103 Ft./Mi.
Average Manning's 'N' = 0.015
Lag time =    0.093 Hr.
Lag time =     5.55 Min.
25% of lag time =     1.39 Min.
40% of lag time =     2.22 Min.
Unit time =     5.00 Min.
Duration of storm = 1 Hour(s)
User Entered Base Flow =     0.00(CFS)

2 YEAR Area rainfall data:


Area(Ac.)[1]       Rainfall(In)[2]      Weighting[1*2]
       88.72         0.55                48.88

100 YEAR Area rainfall data:


Area(Ac.)[1]       Rainfall(In)[2]      Weighting[1*2]
       88.72         1.56               138.40

STORM EVENT (YEAR) =  100.00
Area Averaged 2-Year Rainfall =    0.551(In)
Area Averaged 100-Year Rainfall =    1.560(In)

Point rain (area averaged) =    1.560(In)
Areal adjustment factor =   99.92 %
```

Adjusted average point rain = 1.559(In)

Sub-Area Data:

Area(Ac.)	Runoff Index	Impervious %
88.720	58.20	0.603

Total Area Entered = 88.72(Ac.)

RI AMC2	RI AMC-3	Infil. Rate (In/Hr)	Impervious (Dec.%)	Adj. Infil. Rate (In/Hr)	Area% (Dec.)	F (In/Hr)
58.2	76.6	0.285	0.603	0.130	1.000	0.130
					Sum (F) =	0.130

Area averaged mean soil loss (F) (In/Hr) = 0.130
Minimum soil loss rate ((In/Hr)) = 0.065
(for 24 hour storm duration)
Soil low loss rate (decimal) = 0.418

Slope of intensity-duration curve for a 1 hour storm =0.5300

U n i t H y d r o g r a p h
FOOTHILL S-Curve

Unit Hydrograph Data

Unit time period (hrs)	Time % of lag	Distribution Graph %	Unit Hydrograph (CFS)
1	0.083	90.060	11.290	10.095
2	0.167	180.120	53.524	47.858
3	0.250	270.180	20.793	18.592
4	0.333	360.239	8.570	7.663
5	0.417	450.299	3.631	3.247
6	0.500	540.359	1.109	0.991
7	0.583	630.419	0.646	0.578
8	0.667	720.479	0.436	0.390
		Sum = 100.000	Sum=	89.413

The following loss rate calculations reflect use of the minimum calculated loss rate subtracted from the Storm Rain to produce the maximum Effective Rain value

Unit	Time (Hr.)	Pattern Percent	Storm Rain (In/Hr)	Loss rate(In./Hr) Max	Low	Effective (In/Hr)
1	0.08	3.40	0.636	0.130	(0.266)	0.506
2	0.17	4.70	0.879	0.130	(0.367)	0.749
3	0.25	4.70	0.879	0.130	(0.367)	0.749
4	0.33	5.10	0.954	0.130	(0.399)	0.824
5	0.42	5.80	1.085	0.130	(0.453)	0.955
6	0.50	5.90	1.104	0.130	(0.461)	0.973
7	0.58	7.10	1.328	0.130	(0.555)	1.198
8	0.67	8.70	1.627	0.130	(0.680)	1.497
9	0.75	13.20	2.469	0.130	(1.032)	2.339
10	0.83	29.70	5.555	0.130	(2.322)	5.425
11	0.92	7.70	1.440	0.130	(0.602)	1.310
12	1.00	4.00	0.748	0.130	(0.313)	0.618
		(Loss Rate Not Used)				
Sum =		100.0			Sum =	17.1

Flood volume = Effective rainfall 1.43(In)
times area 88.7(Ac.)/[(In)/(Ft.)] = 10.6(Ac.Ft)
Total soil loss = 0.13(In)
Total soil loss = 0.962(Ac.Ft)
Total rainfall = 1.56(In)
Flood volume = 460086.4 Cubic Feet
Total soil loss = 41913.3 Cubic Feet

```
     ----------------------------------------------------------------------
      Peak flow rate of this hydrograph =    333.721(CFS)
     ----------------------------------------------------------------------
     ++++++++++++++++++++++++++++++++++++++++++++++++++++++++++++++++++++++
                         1 - H O U R    S T O R M
                    R u n o f f     H y d r o g r a p h
     ----------------------------------------------------------------------
                 Hydrograph in   5   Minute intervals ((CFS))

     ----------------------------------------------------------------------
  Time(h+m) Volume Ac.Ft   Q(CFS)  0      100.0     200.0     300.0     400.0
  ---------------------------------------------------------------------
    0+ 5       0.0352      5.11  Q         |         |         |         |
    0+10       0.2541     31.78  V  Q      |         |         |         |
    0+15       0.6180     52.84  | V  Q    |         |         |         |
    0+20       1.0449     61.99  |  V  Q   |         |         |         |
    0+25       1.5298     70.41  |    V Q  |         |         |         |
    0+30       2.0777     79.55  |      Q  |         |         |         |
    0+35       2.6717     86.25  |       Q V         |         |         |
    0+40       3.3739    101.96  |         Q V       |         |         |
    0+45       4.2672    129.70  |         | Q   V   |         |         |
    0+50       5.7045    208.70  |         |         QV        |         |
    0+55       8.0028    333.72  |         |         |         V  Q      |
    1+ 0       9.3445    194.81  |         |        Q|         |    V    |
    1+ 5      10.0726    105.71  |         Q         |         |       V |
    1+10      10.3674     42.82  |   Q     |         |         |        V|
    1+15      10.4798     16.31  |Q        |         |         |        V|
    1+20      10.5305      7.36  Q         |         |         |        V|
    1+25      10.5545      3.49  Q         |         |         |        V|
    1+30      10.5605      0.87  Q         |         |         |        V|
    1+35      10.5621      0.24  Q         |         |         |        V|
---------------------------------------------------------------------
```

```
      U n i t   H y d r o g r a p h   A n a l y s i s

      Copyright (c) CIVILCADD/CIVILDESIGN, 1989 - 2008, Version 8.1
            Study date  11/09/20 File: AREA1324100.out


++++++++++++++++++++++++++++++++++++++++++++++++++++++++++++++++++++++
----------------------------------------------------------------------

Riverside County Synthetic Unit Hydrology Method
RCFC & WCD Manual date - April 1978


Program License Serial Number 6094

-------------------------------------------------------------------
 English (in-lb) Input Units Used
 English Rainfall Data (Inches) Input Values Used

 English Units used in output format



-------------------------------------------------------------------
BEAUMONT POINTE
DEVELOPED UNIT HYDROGRAPH ANALYSIS
AREA 13
100-YEAR
-------------------------------------------------------------------
Drainage Area =      88.72(Ac.)  =      0.139 Sq. Mi.
Drainage Area for Depth-Area Areal Adjustment =      88.72(Ac.)  =      0.139
Sq. Mi.
Length along longest watercourse =    2709.80(Ft.)
Length along longest watercourse measured to centroid =    2303.80(Ft.)
Length along longest watercourse =      0.513 Mi.
Length along longest watercourse measured to centroid =      0.436 Mi.
Difference in elevation =      32.80(Ft.)
Slope along watercourse =     63.9103 Ft./Mi.
Average Manning's 'N' = 0.015
Lag time =    0.093 Hr.
Lag time =     5.55 Min.
25% of lag time =     1.39 Min.
40% of lag time =     2.22 Min.
Unit time =     5.00 Min.
Duration of storm = 24 Hour(s)
User Entered Base Flow =     0.00(CFS)

2 YEAR Area rainfall data:


Area(Ac.)[1]       Rainfall(In)[2]      Weighting[1*2]
       88.72          2.54              225.35

100 YEAR Area rainfall data:


Area(Ac.)[1]       Rainfall(In)[2]      Weighting[1*2]
       88.72          6.18              548.29

STORM EVENT (YEAR) =  100.00
Area Averaged 2-Year Rainfall =    2.540(In)
Area Averaged 100-Year Rainfall =    6.180(In)

Point rain (area averaged) =    6.180(In)
Areal adjustment factor =   99.98 %
```

Adjusted average point rain = 6.179(In)

Sub-Area Data:

Area(Ac.)	Runoff Index	Impervious %
88.720	58.20	0.603

Total Area Entered = 88.72(Ac.)

RI AMC2	RI AMC-3	Infil. Rate (In/Hr)	Impervious (Dec.%)	Adj. Infil. Rate (In/Hr)	Area% (Dec.)	F (In/Hr)
58.2	76.6	0.285	0.603	0.130	1.000	0.130
					Sum (F) =	0.130

Area averaged mean soil loss (F) (In/Hr) = 0.130
Minimum soil loss rate ((In/Hr)) = 0.065
(for 24 hour storm duration)
Soil low loss rate (decimal) = 0.418

U n i t H y d r o g r a p h
FOOTHILL S-Curve

Unit Hydrograph Data

Unit time period (hrs)		Time % of lag	Distribution Graph %	Unit Hydrograph (CFS)
1	0.083	90.060	11.290	10.095
2	0.167	180.120	53.524	47.858
3	0.250	270.180	20.793	18.592
4	0.333	360.239	8.570	7.663
5	0.417	450.299	3.631	3.247
6	0.500	540.359	1.109	0.991
7	0.583	630.419	0.646	0.578
8	0.667	720.479	0.436	0.390
			Sum = 100.000	Sum= 89.413

The following loss rate calculations reflect use of the minimum calculated loss rate subtracted from the Storm Rain to produce the maximum Effective Rain value

Unit	Time (Hr.)	Pattern Percent	Storm Rain (In/Hr)	Loss rate(In./Hr) Max	Low	Effective (In/Hr)
1	0.08	0.07	0.049	(0.231)	0.021	0.029
2	0.17	0.07	0.049	(0.230)	0.021	0.029
3	0.25	0.07	0.049	(0.229)	0.021	0.029
4	0.33	0.10	0.074	(0.228)	0.031	0.043
5	0.42	0.10	0.074	(0.227)	0.031	0.043
6	0.50	0.10	0.074	(0.226)	0.031	0.043
7	0.58	0.10	0.074	(0.225)	0.031	0.043
8	0.67	0.10	0.074	(0.225)	0.031	0.043
9	0.75	0.10	0.074	(0.224)	0.031	0.043
10	0.83	0.13	0.099	(0.223)	0.041	0.058
11	0.92	0.13	0.099	(0.222)	0.041	0.058
12	1.00	0.13	0.099	(0.221)	0.041	0.058
13	1.08	0.10	0.074	(0.220)	0.031	0.043
14	1.17	0.10	0.074	(0.219)	0.031	0.043
15	1.25	0.10	0.074	(0.218)	0.031	0.043
16	1.33	0.10	0.074	(0.218)	0.031	0.043
17	1.42	0.10	0.074	(0.217)	0.031	0.043
18	1.50	0.10	0.074	(0.216)	0.031	0.043
19	1.58	0.10	0.074	(0.215)	0.031	0.043
20	1.67	0.10	0.074	(0.214)	0.031	0.043
21	1.75	0.10	0.074	(0.213)	0.031	0.043
22	1.83	0.13	0.099	(0.212)	0.041	0.058
23	1.92	0.13	0.099	(0.211)	0.041	0.058

24	2.00	0.13	0.099	(0.211)	0.041	0.058
25	2.08	0.13	0.099	(0.210)	0.041	0.058
26	2.17	0.13	0.099	(0.209)	0.041	0.058
27	2.25	0.13	0.099	(0.208)	0.041	0.058
28	2.33	0.13	0.099	(0.207)	0.041	0.058
29	2.42	0.13	0.099	(0.206)	0.041	0.058
30	2.50	0.13	0.099	(0.206)	0.041	0.058
31	2.58	0.17	0.124	(0.205)	0.052	0.072
32	2.67	0.17	0.124	(0.204)	0.052	0.072
33	2.75	0.17	0.124	(0.203)	0.052	0.072
34	2.83	0.17	0.124	(0.202)	0.052	0.072
35	2.92	0.17	0.124	(0.201)	0.052	0.072
36	3.00	0.17	0.124	(0.201)	0.052	0.072
37	3.08	0.17	0.124	(0.200)	0.052	0.072
38	3.17	0.17	0.124	(0.199)	0.052	0.072
39	3.25	0.17	0.124	(0.198)	0.052	0.072
40	3.33	0.17	0.124	(0.197)	0.052	0.072
41	3.42	0.17	0.124	(0.196)	0.052	0.072
42	3.50	0.17	0.124	(0.196)	0.052	0.072
43	3.58	0.17	0.124	(0.195)	0.052	0.072
44	3.67	0.17	0.124	(0.194)	0.052	0.072
45	3.75	0.17	0.124	(0.193)	0.052	0.072
46	3.83	0.20	0.148	(0.192)	0.062	0.086
47	3.92	0.20	0.148	(0.191)	0.062	0.086
48	4.00	0.20	0.148	(0.191)	0.062	0.086
49	4.08	0.20	0.148	(0.190)	0.062	0.086
50	4.17	0.20	0.148	(0.189)	0.062	0.086
51	4.25	0.20	0.148	(0.188)	0.062	0.086
52	4.33	0.23	0.173	(0.187)	0.072	0.101
53	4.42	0.23	0.173	(0.187)	0.072	0.101
54	4.50	0.23	0.173	(0.186)	0.072	0.101
55	4.58	0.23	0.173	(0.185)	0.072	0.101
56	4.67	0.23	0.173	(0.184)	0.072	0.101
57	4.75	0.23	0.173	(0.183)	0.072	0.101
58	4.83	0.27	0.198	(0.183)	0.083	0.115
59	4.92	0.27	0.198	(0.182)	0.083	0.115
60	5.00	0.27	0.198	(0.181)	0.083	0.115
61	5.08	0.20	0.148	(0.180)	0.062	0.086
62	5.17	0.20	0.148	(0.180)	0.062	0.086
63	5.25	0.20	0.148	(0.179)	0.062	0.086
64	5.33	0.23	0.173	(0.178)	0.072	0.101
65	5.42	0.23	0.173	(0.177)	0.072	0.101
66	5.50	0.23	0.173	(0.176)	0.072	0.101
67	5.58	0.27	0.198	(0.176)	0.083	0.115
68	5.67	0.27	0.198	(0.175)	0.083	0.115
69	5.75	0.27	0.198	(0.174)	0.083	0.115
70	5.83	0.27	0.198	(0.173)	0.083	0.115
71	5.92	0.27	0.198	(0.173)	0.083	0.115
72	6.00	0.27	0.198	(0.172)	0.083	0.115
73	6.08	0.30	0.222	(0.171)	0.093	0.129
74	6.17	0.30	0.222	(0.170)	0.093	0.129
75	6.25	0.30	0.222	(0.170)	0.093	0.129
76	6.33	0.30	0.222	(0.169)	0.093	0.129
77	6.42	0.30	0.222	(0.168)	0.093	0.129
78	6.50	0.30	0.222	(0.167)	0.093	0.129
79	6.58	0.33	0.247	(0.166)	0.103	0.144
80	6.67	0.33	0.247	(0.166)	0.103	0.144
81	6.75	0.33	0.247	(0.165)	0.103	0.144
82	6.83	0.33	0.247	(0.164)	0.103	0.144
83	6.92	0.33	0.247	(0.164)	0.103	0.144
84	7.00	0.33	0.247	(0.163)	0.103	0.144
85	7.08	0.33	0.247	(0.162)	0.103	0.144
86	7.17	0.33	0.247	(0.161)	0.103	0.144
87	7.25	0.33	0.247	(0.161)	0.103	0.144
88	7.33	0.37	0.272	(0.160)	0.114	0.158
89	7.42	0.37	0.272	(0.159)	0.114	0.158

90	7.50	0.37	0.272	(	0.158)		0.114	0.158
91	7.58	0.40	0.297	(	0.158)		0.124	0.173
92	7.67	0.40	0.297	(	0.157)		0.124	0.173
93	7.75	0.40	0.297	(	0.156)		0.124	0.173
94	7.83	0.43	0.321	(	0.155)		0.134	0.187
95	7.92	0.43	0.321	(	0.155)		0.134	0.187
96	8.00	0.43	0.321	(	0.154)		0.134	0.187
97	8.08	0.50	0.371		0.153	(	0.155)	0.217
98	8.17	0.50	0.371		0.153	(	0.155)	0.218
99	8.25	0.50	0.371		0.152	(	0.155)	0.219
100	8.33	0.50	0.371		0.151	(	0.155)	0.220
101	8.42	0.50	0.371		0.150	(	0.155)	0.220
102	8.50	0.50	0.371		0.150	(	0.155)	0.221
103	8.58	0.53	0.395		0.149	(	0.165)	0.246
104	8.67	0.53	0.395		0.148	(	0.165)	0.247
105	8.75	0.53	0.395		0.148	(	0.165)	0.248
106	8.83	0.57	0.420		0.147	(	0.176)	0.273
107	8.92	0.57	0.420		0.146	(	0.176)	0.274
108	9.00	0.57	0.420		0.146	(	0.176)	0.275
109	9.08	0.63	0.470		0.145	(	0.196)	0.325
110	9.17	0.63	0.470		0.144	(	0.196)	0.325
111	9.25	0.63	0.470		0.144	(	0.196)	0.326
112	9.33	0.67	0.494		0.143	(	0.207)	0.351
113	9.42	0.67	0.494		0.142	(	0.207)	0.352
114	9.50	0.67	0.494		0.141	(	0.207)	0.353
115	9.58	0.70	0.519		0.141	(	0.217)	0.378
116	9.67	0.70	0.519		0.140	(	0.217)	0.379
117	9.75	0.70	0.519		0.139	(	0.217)	0.380
118	9.83	0.73	0.544		0.139	(	0.227)	0.405
119	9.92	0.73	0.544		0.138	(	0.227)	0.406
120	10.00	0.73	0.544		0.137	(	0.227)	0.406
121	10.08	0.50	0.371		0.137	(	0.155)	0.234
122	10.17	0.50	0.371		0.136	(	0.155)	0.235
123	10.25	0.50	0.371		0.135	(	0.155)	0.235
124	10.33	0.50	0.371		0.135	(	0.155)	0.236
125	10.42	0.50	0.371		0.134	(	0.155)	0.237
126	10.50	0.50	0.371		0.133	(	0.155)	0.237
127	10.58	0.67	0.494		0.133	(	0.207)	0.361
128	10.67	0.67	0.494		0.132	(	0.207)	0.362
129	10.75	0.67	0.494		0.132	(	0.207)	0.363
130	10.83	0.67	0.494		0.131	(	0.207)	0.363
131	10.92	0.67	0.494		0.130	(	0.207)	0.364
132	11.00	0.67	0.494		0.130	(	0.207)	0.365
133	11.08	0.63	0.470		0.129	(	0.196)	0.341
134	11.17	0.63	0.470		0.128	(	0.196)	0.341
135	11.25	0.63	0.470		0.128	(	0.196)	0.342
136	11.33	0.63	0.470		0.127	(	0.196)	0.343
137	11.42	0.63	0.470		0.126	(	0.196)	0.343
138	11.50	0.63	0.470		0.126	(	0.196)	0.344
139	11.58	0.57	0.420		0.125	(	0.176)	0.295
140	11.67	0.57	0.420		0.125	(	0.176)	0.296
141	11.75	0.57	0.420		0.124	(	0.176)	0.296
142	11.83	0.60	0.445		0.123	(	0.186)	0.322
143	11.92	0.60	0.445		0.123	(	0.186)	0.322
144	12.00	0.60	0.445		0.122	(	0.186)	0.323
145	12.08	0.83	0.618		0.121	(	0.258)	0.496
146	12.17	0.83	0.618		0.121	(	0.258)	0.497
147	12.25	0.83	0.618		0.120	(	0.258)	0.498
148	12.33	0.87	0.643		0.120	(	0.269)	0.523
149	12.42	0.87	0.643		0.119	(	0.269)	0.524
150	12.50	0.87	0.643		0.118	(	0.269)	0.524
151	12.58	0.93	0.692		0.118	(	0.289)	0.574
152	12.67	0.93	0.692		0.117	(	0.289)	0.575
153	12.75	0.93	0.692		0.117	(	0.289)	0.575
154	12.83	0.97	0.717		0.116	(	0.300)	0.601
155	12.92	0.97	0.717		0.116	(	0.300)	0.601

156	13.00	0.97	0.717	0.115	(0.300)	0.602
157	13.08	1.13	0.840	0.114	(0.351)	0.726
158	13.17	1.13	0.840	0.114	(0.351)	0.727
159	13.25	1.13	0.840	0.113	(0.351)	0.727
160	13.33	1.13	0.840	0.113	(0.351)	0.728
161	13.42	1.13	0.840	0.112	(0.351)	0.728
162	13.50	1.13	0.840	0.111	(0.351)	0.729
163	13.58	0.77	0.568	0.111	(0.238)	0.458
164	13.67	0.77	0.568	0.110	(0.238)	0.458
165	13.75	0.77	0.568	0.110	(0.238)	0.459
166	13.83	0.77	0.568	0.109	(0.238)	0.459
167	13.92	0.77	0.568	0.109	(0.238)	0.460
168	14.00	0.77	0.568	0.108	(0.238)	0.460
169	14.08	0.90	0.667	0.108	(0.279)	0.560
170	14.17	0.90	0.667	0.107	(0.279)	0.560
171	14.25	0.90	0.667	0.106	(0.279)	0.561
172	14.33	0.87	0.643	0.106	(0.269)	0.537
173	14.42	0.87	0.643	0.105	(0.269)	0.537
174	14.50	0.87	0.643	0.105	(0.269)	0.538
175	14.58	0.87	0.643	0.104	(0.269)	0.538
176	14.67	0.87	0.643	0.104	(0.269)	0.539
177	14.75	0.87	0.643	0.103	(0.269)	0.539
178	14.83	0.83	0.618	0.103	(0.258)	0.515
179	14.92	0.83	0.618	0.102	(0.258)	0.516
180	15.00	0.83	0.618	0.102	(0.258)	0.516
181	15.08	0.80	0.593	0.101	(0.248)	0.492
182	15.17	0.80	0.593	0.101	(0.248)	0.493
183	15.25	0.80	0.593	0.100	(0.248)	0.493
184	15.33	0.77	0.568	0.100	(0.238)	0.469
185	15.42	0.77	0.568	0.099	(0.238)	0.469
186	15.50	0.77	0.568	0.099	(0.238)	0.470
187	15.58	0.63	0.470	0.098	(0.196)	0.372
188	15.67	0.63	0.470	0.098	(0.196)	0.372
189	15.75	0.63	0.470	0.097	(0.196)	0.373
190	15.83	0.63	0.470	0.097	(0.196)	0.373
191	15.92	0.63	0.470	0.096	(0.196)	0.374
192	16.00	0.63	0.470	0.096	(0.196)	0.374
193	16.08	0.13	0.099	(0.095)	0.041	0.058
194	16.17	0.13	0.099	(0.095)	0.041	0.058
195	16.25	0.13	0.099	(0.094)	0.041	0.058
196	16.33	0.13	0.099	(0.094)	0.041	0.058
197	16.42	0.13	0.099	(0.093)	0.041	0.058
198	16.50	0.13	0.099	(0.093)	0.041	0.058
199	16.58	0.10	0.074	(0.092)	0.031	0.043
200	16.67	0.10	0.074	(0.092)	0.031	0.043
201	16.75	0.10	0.074	(0.091)	0.031	0.043
202	16.83	0.10	0.074	(0.091)	0.031	0.043
203	16.92	0.10	0.074	(0.090)	0.031	0.043
204	17.00	0.10	0.074	(0.090)	0.031	0.043
205	17.08	0.17	0.124	(0.089)	0.052	0.072
206	17.17	0.17	0.124	(0.089)	0.052	0.072
207	17.25	0.17	0.124	(0.089)	0.052	0.072
208	17.33	0.17	0.124	(0.088)	0.052	0.072
209	17.42	0.17	0.124	(0.088)	0.052	0.072
210	17.50	0.17	0.124	(0.087)	0.052	0.072
211	17.58	0.17	0.124	(0.087)	0.052	0.072
212	17.67	0.17	0.124	(0.086)	0.052	0.072
213	17.75	0.17	0.124	(0.086)	0.052	0.072
214	17.83	0.13	0.099	(0.085)	0.041	0.058
215	17.92	0.13	0.099	(0.085)	0.041	0.058
216	18.00	0.13	0.099	(0.085)	0.041	0.058
217	18.08	0.13	0.099	(0.084)	0.041	0.058
218	18.17	0.13	0.099	(0.084)	0.041	0.058
219	18.25	0.13	0.099	(0.083)	0.041	0.058
220	18.33	0.13	0.099	(0.083)	0.041	0.058
221	18.42	0.13	0.099	(0.083)	0.041	0.058

222	18.50	0.13	0.099	(0.082)	0.041	0.058
223	18.58	0.10	0.074	(0.082)	0.031	0.043
224	18.67	0.10	0.074	(0.081)	0.031	0.043
225	18.75	0.10	0.074	(0.081)	0.031	0.043
226	18.83	0.07	0.049	(0.081)	0.021	0.029
227	18.92	0.07	0.049	(0.080)	0.021	0.029
228	19.00	0.07	0.049	(0.080)	0.021	0.029
229	19.08	0.10	0.074	(0.079)	0.031	0.043
230	19.17	0.10	0.074	(0.079)	0.031	0.043
231	19.25	0.10	0.074	(0.079)	0.031	0.043
232	19.33	0.13	0.099	(0.078)	0.041	0.058
233	19.42	0.13	0.099	(0.078)	0.041	0.058
234	19.50	0.13	0.099	(0.078)	0.041	0.058
235	19.58	0.10	0.074	(0.077)	0.031	0.043
236	19.67	0.10	0.074	(0.077)	0.031	0.043
237	19.75	0.10	0.074	(0.077)	0.031	0.043
238	19.83	0.07	0.049	(0.076)	0.021	0.029
239	19.92	0.07	0.049	(0.076)	0.021	0.029
240	20.00	0.07	0.049	(0.076)	0.021	0.029
241	20.08	0.10	0.074	(0.075)	0.031	0.043
242	20.17	0.10	0.074	(0.075)	0.031	0.043
243	20.25	0.10	0.074	(0.075)	0.031	0.043
244	20.33	0.10	0.074	(0.074)	0.031	0.043
245	20.42	0.10	0.074	(0.074)	0.031	0.043
246	20.50	0.10	0.074	(0.074)	0.031	0.043
247	20.58	0.10	0.074	(0.073)	0.031	0.043
248	20.67	0.10	0.074	(0.073)	0.031	0.043
249	20.75	0.10	0.074	(0.073)	0.031	0.043
250	20.83	0.07	0.049	(0.072)	0.021	0.029
251	20.92	0.07	0.049	(0.072)	0.021	0.029
252	21.00	0.07	0.049	(0.072)	0.021	0.029
253	21.08	0.10	0.074	(0.072)	0.031	0.043
254	21.17	0.10	0.074	(0.071)	0.031	0.043
255	21.25	0.10	0.074	(0.071)	0.031	0.043
256	21.33	0.07	0.049	(0.071)	0.021	0.029
257	21.42	0.07	0.049	(0.070)	0.021	0.029
258	21.50	0.07	0.049	(0.070)	0.021	0.029
259	21.58	0.10	0.074	(0.070)	0.031	0.043
260	21.67	0.10	0.074	(0.070)	0.031	0.043
261	21.75	0.10	0.074	(0.069)	0.031	0.043
262	21.83	0.07	0.049	(0.069)	0.021	0.029
263	21.92	0.07	0.049	(0.069)	0.021	0.029
264	22.00	0.07	0.049	(0.069)	0.021	0.029
265	22.08	0.10	0.074	(0.068)	0.031	0.043
266	22.17	0.10	0.074	(0.068)	0.031	0.043
267	22.25	0.10	0.074	(0.068)	0.031	0.043
268	22.33	0.07	0.049	(0.068)	0.021	0.029
269	22.42	0.07	0.049	(0.068)	0.021	0.029
270	22.50	0.07	0.049	(0.067)	0.021	0.029
271	22.58	0.07	0.049	(0.067)	0.021	0.029
272	22.67	0.07	0.049	(0.067)	0.021	0.029
273	22.75	0.07	0.049	(0.067)	0.021	0.029
274	22.83	0.07	0.049	(0.067)	0.021	0.029
275	22.92	0.07	0.049	(0.067)	0.021	0.029
276	23.00	0.07	0.049	(0.066)	0.021	0.029
277	23.08	0.07	0.049	(0.066)	0.021	0.029
278	23.17	0.07	0.049	(0.066)	0.021	0.029
279	23.25	0.07	0.049	(0.066)	0.021	0.029
280	23.33	0.07	0.049	(0.066)	0.021	0.029
281	23.42	0.07	0.049	(0.066)	0.021	0.029
282	23.50	0.07	0.049	(0.066)	0.021	0.029
283	23.58	0.07	0.049	(0.065)	0.021	0.029
284	23.67	0.07	0.049	(0.065)	0.021	0.029
285	23.75	0.07	0.049	(0.065)	0.021	0.029
286	23.83	0.07	0.049	(0.065)	0.021	0.029
287	23.92	0.07	0.049	(0.065)	0.021	0.029

```
288  24.00     0.07      0.049       (  0.065)       0.021        0.029
             (Loss Rate Not Used)
    Sum =     100.0                                    Sum =    53.0
      Flood volume = Effective rainfall      4.42(In)
       times area      88.7(Ac.)/[(In)/(Ft.)] =      32.7(Ac.Ft)
      Total soil loss =      1.76(In)
      Total soil loss =    13.004(Ac.Ft)
      Total rainfall =      6.18(In)
      Flood volume =     1423473.4 Cubic Feet
      Total soil loss =      566473.0 Cubic Feet
      ---------------------------------------------------------------------
       Peak flow rate of this hydrograph =     65.008(CFS)
      ---------------------------------------------------------------------
      ++++++++++++++++++++++++++++++++++++++++++++++++++++++++++++++++++++++
                          24 - H O U R    S T O R M
                     R u n o f f      H y d r o g r a p h
      ---------------------------------------------------------------------
                  Hydrograph in   5   Minute intervals ((CFS))

      ---------------------------------------------------------------------
 Time(h+m) Volume Ac.Ft   Q(CFS)  0       17.5      35.0      52.5      70.0
 ----------------------------------------------------------------------
   0+ 5       0.0020      0.29  Q         |         |         |         |
   0+10       0.0135      1.67  Q         |         |         |         |
   0+15       0.0287      2.20  VQ        |         |         |         |
   0+20       0.0464      2.57  VQ        |         |         |         |
   0+25       0.0694      3.35  VQ        |         |         |         |
   0+30       0.0946      3.65  V Q       |         |         |         |
   0+35       0.1206      3.77  V Q       |         |         |         |
   0+40       0.1469      3.83  V Q       |         |         |         |
   0+45       0.1734      3.85  V Q       |         |         |         |
   0+50       0.2010      4.00  V Q       |         |         |         |
   0+55       0.2333      4.69  V Q       |         |         |         |
   1+ 0       0.2675      4.96  V Q       |         |         |         |
   1+ 5       0.3014      4.93  V Q       |         |         |         |
   1+10       0.3309      4.29  V Q       |         |         |         |
   1+15       0.3587      4.03  V Q       |         |         |         |
   1+20       0.3858      3.93  V Q       |         |         |         |
   1+25       0.4125      3.89  V Q       |         |         |         |
   1+30       0.4392      3.87  V Q       |         |         |         |
   1+35       0.4659      3.87  V Q       |         |         |         |
   1+40       0.4924      3.86  V Q       |         |         |         |
   1+45       0.5190      3.86  V Q       |         |         |         |
   1+50       0.5466      4.01  V Q       |         |         |         |
   1+55       0.5790      4.69  V Q       |         |         |         |
   2+ 0       0.6131      4.96  V Q       |         |         |         |
   2+ 5       0.6481      5.07  V Q       |         |         |         |
   2+10       0.6833      5.12  V Q       |         |         |         |
   2+15       0.7187      5.13  V Q       |         |         |         |
   2+20       0.7541      5.14  V Q       |         |         |         |
   2+25       0.7895      5.15  V Q       |         |         |         |
   2+30       0.8250      5.15  |VQ       |         |         |         |
   2+35       0.8614      5.29  |V Q      |         |         |         |
   2+40       0.9026      5.98  |V Q      |         |         |         |
   2+45       0.9457      6.25  |V Q      |         |         |         |
   2+50       0.9895      6.36  |V Q      |         |         |         |
   2+55       1.0336      6.41  |V Q      |         |         |         |
   3+ 0       1.0778      6.42  |V Q      |         |         |         |
   3+ 5       1.1221      6.43  |V Q      |         |         |         |
   3+10       1.1664      6.43  |V Q      |         |         |         |
   3+15       1.2107      6.43  |V Q      |         |         |         |
   3+20       1.2550      6.43  |V Q      |         |         |         |
   3+25       1.2993      6.43  |V Q      |         |         |         |
   3+30       1.3436      6.43  |V Q      |         |         |         |
   3+35       1.3879      6.43  |V Q      |         |         |         |
   3+40       1.4323      6.43  |V Q      |         |         |         |
```

```
3+45       1.4766      6.43  |V Q      |          |          |          |
3+50       1.5219      6.58  |V Q      |          |          |          |
3+55       1.5719      7.27  |V  Q     |          |          |          |
4+ 0       1.6238      7.54  |V  Q     |          |          |          |
4+ 5       1.6765      7.65  | V Q     |          |          |          |
4+10       1.7295      7.69  | V Q     |          |          |          |
4+15       1.7826      7.71  | V Q     |          |          |          |
4+20       1.8367      7.86  | V Q     |          |          |          |
4+25       1.8956      8.56  | V Q     |          |          |          |
4+30       1.9564      8.82  | V  Q    |          |          |          |
4+35       2.0179      8.93  | V  Q    |          |          |          |
4+40       2.0797      8.98  | V  Q    |          |          |          |
4+45       2.1417      8.99  | V  Q    |          |          |          |
4+50       2.2047      9.15  | V  Q    |          |          |          |
4+55       2.2725      9.84  | V  Q    |          |          |          |
5+ 0       2.3421     10.11  | V  Q    |          |          |          |
5+ 5       2.4105      9.93  | V  Q    |          |          |          |
5+10       2.4697      8.60  |  VQ     |          |          |          |
5+15       2.5253      8.08  |  VQ     |          |          |          |
5+20       2.5805      8.01  |  VQ     |          |          |          |
5+25       2.6398      8.61  |  VQ     |          |          |          |
5+30       2.7007      8.85  |  V Q    |          |          |          |
5+35       2.7633      9.09  |  V Q    |          |          |          |
5+40       2.8309      9.81  |  V Q    |          |          |          |
5+45       2.9005     10.10  |  V Q    |          |          |          |
5+50       2.9708     10.21  |  V Q    |          |          |          |
5+55       3.0415     10.27  |  V Q    |          |          |          |
6+ 0       3.1123     10.28  |  V Q    |          |          |          |
6+ 5       3.1842     10.43  |  V Q    |          |          |          |
6+10       3.2608     11.13  |  V  Q   |          |          |          |
6+15       3.3393     11.40  |   V Q   |          |          |          |
6+20       3.4186     11.51  |   V Q   |          |          |          |
6+25       3.4981     11.55  |   V Q   |          |          |          |
6+30       3.5778     11.57  |   V Q   |          |          |          |
6+35       3.6585     11.72  |   V Q   |          |          |          |
6+40       3.7440     12.42  |   V  Q  |          |          |          |
6+45       3.8314     12.68  |   V  Q  |          |          |          |
6+50       3.9195     12.79  |   V  Q  |          |          |          |
6+55       4.0079     12.84  |   V  Q  |          |          |          |
7+ 0       4.0964     12.85  |    V Q  |          |          |          |
7+ 5       4.1850     12.86  |    V Q  |          |          |          |
7+10       4.2736     12.87  |    V Q  |          |          |          |
7+15       4.3623     12.87  |    V Q  |          |          |          |
7+20       4.4519     13.01  |    V Q  |          |          |          |
7+25       4.5463     13.70  |    V Q  |          |          |          |
7+30       4.6425     13.97  |    V Q  |          |          |          |
7+35       4.7404     14.23  |    V  Q |          |          |          |
7+40       4.8435     14.96  |    V  Q |          |          |          |
7+45       4.9485     15.24  |     V Q |          |          |          |
7+50       5.0553     15.51  |     V Q |          |          |          |
7+55       5.1672     16.25  |     V  Q|          |          |          |
8+ 0       5.2810     16.53  |     V  Q|          |          |          |
8+ 5       5.3978     16.96  |     V  Q|          |          |          |
8+10       5.5250     18.47  |     V   Q          |          |          |
8+15       5.6565     19.09  |     V   Q          |          |          |
8+20       5.7900     19.39  |      V  |Q         |          |          |
8+25       5.9247     19.55  |      V  |Q         |          |          |
8+30       6.0600     19.65  |      V  |Q         |          |          |
8+35       6.1976     19.98  |      V  |Q         |          |          |
8+40       6.3438     21.23  |      V  | Q        |          |          |
8+45       6.4937     21.76  |      V  | Q        |          |          |
8+50       6.6470     22.26  |       V | Q        |          |          |
8+55       6.8094     23.58  |       V |  Q       |          |          |
9+ 0       6.9756     24.13  |       V |  Q       |          |          |
9+ 5       7.1470     24.90  |       V |   Q      |          |          |
9+10       7.3359     27.41  |       V |    Q     |          |          |
```

```
 9+15       7.5316     28.42  |         V|     Q   |          |          |
 9+20       7.7322     29.12  |         V|     Q   |          |          |
 9+25       7.9425     30.54  |         V|      Q  |          |          |
 9+30       8.1567     31.11  |         V|      Q  |          |          |
 9+35       8.3746     31.64  |          V       Q |          |          |
 9+40       8.6018     32.98  |          V       Q |          |          |
 9+45       8.8327     33.53  |          V        Q|          |          |
 9+50       9.0671     34.04  |          |V       Q|          |          |
 9+55       9.3107     35.37  |          |V        Q          |          |
10+ 0       9.5581     35.92  |          |V        Q          |          |
10+ 5       9.7953     34.43  |          |V       Q|          |          |
10+10       9.9764     26.30  |          | V  Q    |          |          |
10+15      10.1359     23.17  |          | VQ      |          |          |
10+20      10.2868     21.91  |          | Q       |          |          |
10+25      10.4344     21.42  |          | Q       |          |          |
10+30      10.5811     21.31  |          | Q       |          |          |
10+35      10.7361     22.51  |          | QV      |          |          |
10+40      10.9319     28.42  |          |  V  Q   |          |          |
10+45      11.1438     30.78  |          |  V   Q  |          |          |
10+50      11.3627     31.78  |          |  V    Q |          |          |
10+55      11.5848     32.24  |          |   V   Q |          |          |
11+ 0      11.8081     32.42  |          |   V   Q |          |          |
11+ 5      12.0305     32.30  |          |   V   Q |          |          |
11+10      12.2456     31.22  |          |   V  Q  |          |          |
11+15      12.4578     30.82  |          |    V Q  |          |          |
11+20      12.6692     30.69  |          |    V Q  |          |          |
11+25      12.8804     30.66  |          |    V Q  |          |          |
11+30      13.0918     30.70  |          |     VQ  |          |          |
11+35      13.3000     30.24  |          |     VQ  |          |          |
11+40      13.4923     27.92  |          |    QV   |          |          |
11+45      13.6786     27.05  |          |    QV   |          |          |
11+50      13.8644     26.98  |          |    QV   |          |          |
11+55      14.0577     28.06  |          |     QV  |          |          |
12+ 0      14.2541     28.52  |          |     QV  |          |          |
12+ 5      14.4641     30.49  |          |      Q  |          |          |
12+10      14.7319     38.89  |          |       V | Q        |          |
12+15      15.0225     42.18  |          |       V |   Q      |          |
12+20      15.3243     43.83  |          |       V |    Q     |          |
12+25      15.6386     45.64  |          |        V|     Q    |          |
12+30      15.9577     46.32  |          |        V|     Q    |          |
12+35      16.2825     47.17  |          |        V|     Q    |          |
12+40      16.6250     49.73  |          |         V       Q |          |
12+45      16.9744     50.73  |          |         V       Q |          |
12+50      17.3286     51.43  |          |         |V       Q|          |
12+55      17.6925     52.83  |          |         |V        Q          |
13+ 0      18.0602     53.40  |          |         | V       Q          |
13+ 5      18.4384     54.91  |          |         | V       |Q         |
13+10      18.8584     60.98  |          |         |  V      |   Q      |
13+15      19.2948     63.36  |          |         |  V      |     Q    |
13+20      19.7381     64.37  |          |         |   V     |     Q    |
13+25      20.1846     64.83  |          |         |   V     |      Q   |
13+30      20.6323     65.01  |          |         |    V    |      Q   |
13+35      21.0620     62.38  |          |         |    V    |    Q     |
13+40      21.4027     49.47  |          |         |     V Q |          |
13+45      21.7089     44.46  |          |         |    QV   |          |
13+50      22.0010     42.43  |          |         |   Q V   |          |
13+55      22.2875     41.59  |          |         |  Q   V  |          |
14+ 0      22.5724     41.37  |          |         |  Q   V  |          |
14+ 5      22.8635     42.26  |          |         |   Q  V  |          |
14+10      23.1868     46.94  |          |         |     Q V |          |
14+15      23.5231     48.83  |          |         |      QV |          |
14+20      23.8632     49.39  |          |         |       QV|          |
14+25      24.1977     48.57  |          |         |      Q V|          |
14+30      24.5301     48.26  |          |         |      Q  V          |
14+35      24.8619     48.18  |          |         |      Q  V          |
14+40      25.1937     48.18  |          |         |      Q  V          |
```

```
14+45      25.5257     48.21  |          |          |      Q   |V         |
14+50      25.8563     47.99  |          |          |      Q   |V         |
14+55      26.1789     46.84  |          |          |     Q    | V        |
15+ 0      26.4987     46.43  |          |          |     Q    | V        |
15+ 5      26.8157     46.04  |          |          |     Q    | V        |
15+10      27.1244     44.82  |          |          |    Q     |  V       |
15+15      27.4301     44.38  |          |          |    Q     |  V       |
15+20      27.7330     43.98  |          |          |    Q     |  V       |
15+25      28.0274     42.75  |          |          |   Q      |   V      |
15+30      28.3188     42.31  |          |          |   Q      |   V      |
15+35      28.6022     41.16  |          |          |  Q       |    V     |
15+40      28.8528     36.38  |          |         Q          |    V     |
15+45      29.0908     34.56  |          |        Q|          |    V     |
15+50      29.3238     33.83  |          |        Q|          |    V     |
15+55      29.5548     33.54  |          |        Q|          |     V    |
16+ 0      29.7854     33.49  |          |        Q|          |     V    |
16+ 5      29.9940     30.28  |          |      Q  |          |     V    |
16+10      30.0979     15.10  |        Q |         |          |     V    |
16+15      30.1614      9.22  |     Q    |         |          |     V    |
16+20      30.2082      6.79  |  Q       |         |          |     V    |
16+25      30.2479      5.77  |  Q       |         |          |      V   |
16+30      30.2855      5.45  |  Q       |         |          |      V   |
16+35      30.3208      5.13  | Q        |         |          |      V   |
16+40      30.3505      4.31  | Q        |         |          |      V   |
16+45      30.3784      4.05  | Q        |         |          |      V   |
16+50      30.4055      3.94  | Q        |         |          |      V   |
16+55      30.4323      3.89  | Q        |         |          |      V   |
17+ 0      30.4589      3.87  | Q        |         |          |      V   |
17+ 5      30.4876      4.16  | Q        |         |          |      V   |
17+10      30.5256      5.53  |  Q       |         |          |      V   |
17+15      30.5674      6.06  |  Q       |         |          |      V   |
17+20      30.6107      6.28  |  Q       |         |          |      V   |
17+25      30.6546      6.38  |  Q       |         |          |      V   |
17+30      30.6987      6.41  |  Q       |         |          |      V   |
17+35      30.7430      6.42  |  Q       |         |          |      V   |
17+40      30.7873      6.43  |  Q       |         |          |      V   |
17+45      30.8316      6.43  |  Q       |         |          |      V   |
17+50      30.8749      6.29  |  Q       |         |          |      V   |
17+55      30.9135      5.60  |  Q       |         |          |      V   |
18+ 0      30.9502      5.33  |  Q       |         |          |      V   |
18+ 5      30.9862      5.22  | Q        |         |          |      V   |
18+10      31.0218      5.18  | Q        |         |          |      V   |
18+15      31.0574      5.16  | Q        |         |          |       V  |
18+20      31.0928      5.15  | Q        |         |          |       V  |
18+25      31.1283      5.15  | Q        |         |          |       V  |
18+30      31.1637      5.15  | Q        |         |          |       V  |
18+35      31.1982      5.00  | Q        |         |          |       V  |
18+40      31.2279      4.31  | Q        |         |          |       V  |
18+45      31.2558      4.05  | Q        |         |          |       V  |
18+50      31.2819      3.79  | Q        |         |          |       V  |
18+55      31.3029      3.05  |Q         |         |          |       V  |
19+ 0      31.3220      2.77  |Q         |         |          |       V  |
19+ 5      31.3413      2.80  |Q         |         |          |       V  |
19+10      31.3649      3.44  |Q         |         |          |       V  |
19+15      31.3903      3.69  | Q        |         |          |       V  |
19+20      31.4175      3.94  | Q        |         |          |       V  |
19+25      31.4496      4.67  | Q        |         |          |       V  |
19+30      31.4837      4.95  | Q        |         |          |       V  |
19+35      31.5176      4.92  | Q        |         |          |       V  |
19+40      31.5471      4.29  | Q        |         |          |       V  |
19+45      31.5748      4.03  | Q        |         |          |       V  |
19+50      31.6009      3.78  | Q        |         |          |       V  |
19+55      31.6219      3.05  |Q         |         |          |       V  |
20+ 0      31.6410      2.77  |Q         |         |          |       V  |
20+ 5      31.6603      2.80  |Q         |         |          |       V  |
20+10      31.6840      3.44  |Q         |         |          |       V  |
```

```
   20+15      31.7094      3.69  | Q       |         |         |       V |
   20+20      31.7355      3.79  | Q       |         |         |       V |
   20+25      31.7619      3.83  | Q       |         |         |       V |
   20+30      31.7884      3.85  | Q       |         |         |       V |
   20+35      31.8149      3.85  | Q       |         |         |       V |
   20+40      31.8415      3.86  | Q       |         |         |       V |
   20+45      31.8681      3.86  | Q       |         |         |        V|
   20+50      31.8937      3.72  | Q       |         |         |        V|
   20+55      31.9145      3.03  |Q        |         |         |        V|
   21+ 0      31.9335      2.76  |Q        |         |         |        V|
   21+ 5      31.9528      2.79  |Q        |         |         |        V|
   21+10      31.9765      3.44  |Q        |         |         |        V|
   21+15      32.0019      3.69  | Q       |         |         |        V|
   21+20      32.0270      3.65  | Q       |         |         |        V|
   21+25      32.0476      3.00  |Q        |         |         |        V|
   21+30      32.0665      2.74  |Q        |         |         |        V|
   21+35      32.0857      2.79  |Q        |         |         |        V|
   21+40      32.1094      3.44  |Q        |         |         |        V|
   21+45      32.1348      3.69  | Q       |         |         |        V|
   21+50      32.1599      3.65  | Q       |         |         |        V|
   21+55      32.1806      3.00  |Q        |         |         |        V|
   22+ 0      32.1995      2.74  |Q        |         |         |        V|
   22+ 5      32.2187      2.79  |Q        |         |         |        V|
   22+10      32.2423      3.44  |Q        |         |         |        V|
   22+15      32.2677      3.69  | Q       |         |         |        V|
   22+20      32.2928      3.65  | Q       |         |         |        V|
   22+25      32.3135      3.00  |Q        |         |         |        V|
   22+30      32.3324      2.74  |Q        |         |         |        V|
   22+35      32.3506      2.64  |Q        |         |         |        V|
   22+40      32.3685      2.60  |Q        |         |         |        V|
   22+45      32.3863      2.59  |Q        |         |         |        V|
   22+50      32.4041      2.58  |Q        |         |         |        V|
   22+55      32.4218      2.57  |Q        |         |         |        V|
   23+ 0      32.4396      2.57  |Q        |         |         |        V|
   23+ 5      32.4573      2.57  |Q        |         |         |        V|
   23+10      32.4750      2.57  |Q        |         |         |        V|
   23+15      32.4927      2.57  |Q        |         |         |        V|
   23+20      32.5105      2.57  |Q        |         |         |        V|
   23+25      32.5282      2.57  |Q        |         |         |        V|
   23+30      32.5459      2.57  |Q        |         |         |        V|
   23+35      32.5636      2.57  |Q        |         |         |        V|
   23+40      32.5814      2.57  |Q        |         |         |        V|
   23+45      32.5991      2.57  |Q        |         |         |        V|
   23+50      32.6168      2.57  |Q        |         |         |        V|
   23+55      32.6345      2.57  |Q        |         |         |        V|
   24+ 0      32.6523      2.57  |Q        |         |         |        V|
   24+ 5      32.6680      2.28  |Q        |         |         |        V|
   24+10      32.6742      0.91  Q         |         |         |        V|
   24+15      32.6768      0.37  Q         |         |         |        V|
   24+20      32.6778      0.15  Q         |         |         |        V|
   24+25      32.6782      0.06  Q         |         |         |        V|
   24+30      32.6784      0.03  Q         |         |         |        V|
   24+35      32.6785      0.01  Q         |         |         |         V
-----------------------------------------------------------------------
```

```
      U n i t   H y d r o g r a p h   A n a l y s i s

      Copyright (c) CIVILCADD/CIVILDESIGN, 1989 - 2008, Version 8.1
            Study date  11/09/20 File: AREA161100.out


++++++++++++++++++++++++++++++++++++++++++++++++++++++++++++++++++++++
----------------------------------------------------------------------

Riverside County Synthetic Unit Hydrology Method
RCFC & WCD Manual date - April 1978


Program License Serial Number 6094

--------------------------------------------------------------------
 English (in-lb) Input Units Used
 English Rainfall Data (Inches) Input Values Used

 English Units used in output format



--------------------------------------------------------------------
BEAUMONT POINTE
DEVELOPED UNIT HYDROGRAPH ANALYSIS
AREA 16
100-YEAR
--------------------------------------------------------------------
Drainage Area =      85.60(Ac.)  =      0.134 Sq. Mi.
Drainage Area for Depth-Area Areal Adjustment =      85.60(Ac.)  =      0.134
Sq. Mi.
Length along longest watercourse =    4129.80(Ft.)
Length along longest watercourse measured to centroid =    2770.20(Ft.)
Length along longest watercourse =      0.782 Mi.
Length along longest watercourse measured to centroid =      0.525 Mi.
Difference in elevation =     150.00(Ft.)
Slope along watercourse =    191.7768 Ft./Mi.
Average Manning's 'N' = 0.015
Lag time =    0.095 Hr.
Lag time =     5.67 Min.
25% of lag time =     1.42 Min.
40% of lag time =     2.27 Min.
Unit time =     5.00 Min.
Duration of storm = 1 Hour(s)
User Entered Base Flow =     0.00(CFS)

2 YEAR Area rainfall data:


Area(Ac.)[1]       Rainfall(In)[2]      Weighting[1*2]
       85.60         0.55                47.17

100 YEAR Area rainfall data:


Area(Ac.)[1]       Rainfall(In)[2]      Weighting[1*2]
       85.60         1.56               133.54

STORM EVENT (YEAR) =  100.00
Area Averaged 2-Year Rainfall =    0.551(In)
Area Averaged 100-Year Rainfall =    1.560(In)

Point rain (area averaged) =    1.560(In)
Areal adjustment factor =   99.92 %
```

Adjusted average point rain = 1.559(In)

Sub-Area Data:

Area(Ac.)	Runoff Index	Impervious %
85.600	54.90	0.679

Total Area Entered = 85.60(Ac.)

RI AMC2	RI AMC-3	Infil. Rate (In/Hr)	Impervious (Dec.%)	Adj. Infil. Rate (In/Hr)	Area% (Dec.)	F (In/Hr)
54.9	73.9	0.316	0.679	0.123	1.000	0.123
					Sum (F) =	0.123

Area averaged mean soil loss (F) (In/Hr) = 0.123
Minimum soil loss rate ((In/Hr)) = 0.061
(for 24 hour storm duration)
Soil low loss rate (decimal) = 0.357

Slope of intensity-duration curve for a 1 hour storm =0.5300

U n i t H y d r o g r a p h
FOOTHILL S-Curve

Unit Hydrograph Data

Unit time period (hrs)	Time % of lag	Distribution Graph %	Unit Hydrograph (CFS)
1	0.083	88.154	10.815	9.330
2	0.167	176.308	52.730	45.490
3	0.250	264.462	21.422	18.481
4	0.333	352.616	8.785	7.578
5	0.417	440.770	3.870	3.339
6	0.500	528.924	1.206	1.040
7	0.583	617.078	0.654	0.564
8	0.667	705.232	0.518	0.447
		Sum = 100.000	Sum=	86.269

The following loss rate calculations reflect use of the minimum calculated loss rate subtracted from the Storm Rain to produce the maximum Effective Rain value

Unit	Time (Hr.)	Pattern Percent	Storm Rain (In/Hr)	Loss rate(In./Hr) Max	Low	Effective (In/Hr)
1	0.08	3.40	0.636	0.123	(0.227)	0.513
2	0.17	4.70	0.879	0.123	(0.314)	0.756
3	0.25	4.70	0.879	0.123	(0.314)	0.756
4	0.33	5.10	0.954	0.123	(0.341)	0.831
5	0.42	5.80	1.085	0.123	(0.387)	0.962
6	0.50	5.90	1.104	0.123	(0.394)	0.981
7	0.58	7.10	1.328	0.123	(0.474)	1.205
8	0.67	8.70	1.627	0.123	(0.581)	1.505
9	0.75	13.20	2.469	0.123	(0.881)	2.346
10	0.83	29.70	5.556	0.123	(1.983)	5.433
11	0.92	7.70	1.440	0.123	(0.514)	1.318
12	1.00	4.00	0.748	0.123	(0.267)	0.625
		(Loss Rate Not Used)				
Sum =		100.0			Sum =	17.2

Flood volume = Effective rainfall 1.44(In)
times area 85.6(Ac.)/[(In)/(Ft.)] = 10.2(Ac.Ft)
Total soil loss = 0.12(In)
Total soil loss = 0.876(Ac.Ft)
Total rainfall = 1.56(In)
Flood volume = 446204.5 Cubic Feet
Total soil loss = 38155.2 Cubic Feet

```
      ----------------------------------------------------------------
       Peak flow rate of this hydrograph =    320.315(CFS)
      ----------------------------------------------------------------
      ++++++++++++++++++++++++++++++++++++++++++++++++++++++++++++++++
                         1 - H O U R    S T O R M
                    R u n o f f     H y d r o g r a p h
      ----------------------------------------------------------------
                  Hydrograph in   5   Minute intervals ((CFS))

      ----------------------------------------------------------------
  Time(h+m) Volume Ac.Ft   Q(CFS)  0      100.0     200.0     300.0     400.0
  ---------------------------------------------------------------------
    0+ 5       0.0330      4.79  Q         |         |         |         |
    0+10       0.2425     30.42  V  Q      |         |         |         |
    0+15       0.5935     50.97  | V  Q    |         |         |         |
    0+20       1.0072     60.06  |  V  Q   |         |         |         |
    0+25       1.4772     68.25  |    VQ   |         |         |         |
    0+30       2.0083     77.11  |      Q  |         |         |         |
    0+35       2.5839     83.59  |       Q V         |         |         |
    0+40       3.2627     98.55  |        Q| V       |         |         |
    0+45       4.1232    124.95  |         | Q   V   |         |         |
    0+50       5.4975    199.55  |         |        Q|V        |         |
    0+55       7.7035    320.31  |         |         |         V Q       |
    1+ 0       9.0211    191.31  |         |        Q|         |    V    |
    1+ 5       9.7411    104.54  |         Q         |         |       V |
    1+10      10.0409     43.53  |   Q     |         |         |        V|
    1+15      10.1565     16.80  |Q        |         |         |        V|
    1+20      10.2087      7.58  Q         |         |         |        V|
    1+25      10.2350      3.82  Q         |         |         |        V|
    1+30      10.2415      0.94  Q         |         |         |        V|
    1+35      10.2434      0.28  Q         |         |         |         V
---------------------------------------------------------------------
```

```
      U n i t   H y d r o g r a p h   A n a l y s i s

      Copyright (c) CIVILCADD/CIVILDESIGN, 1989 - 2008, Version 8.1
            Study date  11/09/20 File: AREA1624100.out


++++++++++++++++++++++++++++++++++++++++++++++++++++++++++++++++++++++
----------------------------------------------------------------------

Riverside County Synthetic Unit Hydrology Method
RCFC & WCD Manual date - April 1978


Program License Serial Number 6094

-------------------------------------------------------------------
 English (in-lb) Input Units Used
 English Rainfall Data (Inches) Input Values Used

 English Units used in output format



-------------------------------------------------------------------
BEAUMONT POINTE
DEVELOPED UNIT HYDROGRAPH ANALYSIS
AREA 16
100-YEAR
-------------------------------------------------------------------
Drainage Area =      85.60(Ac.)  =      0.134 Sq. Mi.
Drainage Area for Depth-Area Areal Adjustment =      85.60(Ac.)  =      0.134
Sq. Mi.
Length along longest watercourse =    4129.80(Ft.)
Length along longest watercourse measured to centroid =    2770.20(Ft.)
Length along longest watercourse =      0.782 Mi.
Length along longest watercourse measured to centroid =      0.525 Mi.
Difference in elevation =     150.00(Ft.)
Slope along watercourse =    191.7768 Ft./Mi.
Average Manning's 'N' = 0.015
Lag time =    0.095 Hr.
Lag time =     5.67 Min.
25% of lag time =     1.42 Min.
40% of lag time =     2.27 Min.
Unit time =     5.00 Min.
Duration of storm = 24 Hour(s)
User Entered Base Flow =     0.00(CFS)

2 YEAR Area rainfall data:


Area(Ac.)[1]       Rainfall(In)[2]      Weighting[1*2]
       85.60         2.54              217.42

100 YEAR Area rainfall data:


Area(Ac.)[1]       Rainfall(In)[2]      Weighting[1*2]
       85.60         6.18              529.01

STORM EVENT (YEAR) =  100.00
Area Averaged 2-Year Rainfall =    2.540(In)
Area Averaged 100-Year Rainfall =    6.180(In)

Point rain (area averaged) =    6.180(In)
Areal adjustment factor =   99.98 %
```

Adjusted average point rain = 6.179(In)

Sub-Area Data:

Area(Ac.)	Runoff Index	Impervious %
85.600	54.90	0.679

Total Area Entered = 85.60(Ac.)

RI AMC2	RI AMC-3	Infil. Rate (In/Hr)	Impervious (Dec.%)	Adj. Infil. Rate (In/Hr)	Area% (Dec.)	F (In/Hr)
54.9	73.9	0.316	0.679	0.123	1.000	0.123
					Sum (F) =	0.123

Area averaged mean soil loss (F) (In/Hr) = 0.123
Minimum soil loss rate ((In/Hr)) = 0.061
(for 24 hour storm duration)
Soil low loss rate (decimal) = 0.357

U n i t H y d r o g r a p h
FOOTHILL S-Curve

Unit Hydrograph Data

Unit time period (hrs)		Time % of lag	Distribution Graph %	Unit Hydrograph (CFS)
1	0.083	88.154	10.815	9.330
2	0.167	176.308	52.730	45.490
3	0.250	264.462	21.422	18.481
4	0.333	352.616	8.785	7.578
5	0.417	440.770	3.870	3.339
6	0.500	528.924	1.206	1.040
7	0.583	617.078	0.654	0.564
8	0.667	705.232	0.518	0.447
			Sum = 100.000	Sum= 86.269

The following loss rate calculations reflect use of the minimum calculated loss rate subtracted from the Storm Rain to produce the maximum Effective Rain value

Unit	Time (Hr.)	Pattern Percent	Storm Rain (In/Hr)	Loss rate(In./Hr) Max	Low	Effective (In/Hr)
1	0.08	0.07	0.049	(0.218)	0.018	0.032
2	0.17	0.07	0.049	(0.217)	0.018	0.032
3	0.25	0.07	0.049	(0.216)	0.018	0.032
4	0.33	0.10	0.074	(0.215)	0.026	0.048
5	0.42	0.10	0.074	(0.214)	0.026	0.048
6	0.50	0.10	0.074	(0.213)	0.026	0.048
7	0.58	0.10	0.074	(0.213)	0.026	0.048
8	0.67	0.10	0.074	(0.212)	0.026	0.048
9	0.75	0.10	0.074	(0.211)	0.026	0.048
10	0.83	0.13	0.099	(0.210)	0.035	0.064
11	0.92	0.13	0.099	(0.209)	0.035	0.064
12	1.00	0.13	0.099	(0.209)	0.035	0.064
13	1.08	0.10	0.074	(0.208)	0.026	0.048
14	1.17	0.10	0.074	(0.207)	0.026	0.048
15	1.25	0.10	0.074	(0.206)	0.026	0.048
16	1.33	0.10	0.074	(0.205)	0.026	0.048
17	1.42	0.10	0.074	(0.204)	0.026	0.048
18	1.50	0.10	0.074	(0.204)	0.026	0.048
19	1.58	0.10	0.074	(0.203)	0.026	0.048
20	1.67	0.10	0.074	(0.202)	0.026	0.048
21	1.75	0.10	0.074	(0.201)	0.026	0.048
22	1.83	0.13	0.099	(0.200)	0.035	0.064
23	1.92	0.13	0.099	(0.200)	0.035	0.064

24	2.00	0.13	0.099	(0.199)	0.035	0.064
25	2.08	0.13	0.099	(0.198)	0.035	0.064
26	2.17	0.13	0.099	(0.197)	0.035	0.064
27	2.25	0.13	0.099	(0.196)	0.035	0.064
28	2.33	0.13	0.099	(0.196)	0.035	0.064
29	2.42	0.13	0.099	(0.195)	0.035	0.064
30	2.50	0.13	0.099	(0.194)	0.035	0.064
31	2.58	0.17	0.124	(0.193)	0.044	0.079
32	2.67	0.17	0.124	(0.192)	0.044	0.079
33	2.75	0.17	0.124	(0.192)	0.044	0.079
34	2.83	0.17	0.124	(0.191)	0.044	0.079
35	2.92	0.17	0.124	(0.190)	0.044	0.079
36	3.00	0.17	0.124	(0.189)	0.044	0.079
37	3.08	0.17	0.124	(0.188)	0.044	0.079
38	3.17	0.17	0.124	(0.188)	0.044	0.079
39	3.25	0.17	0.124	(0.187)	0.044	0.079
40	3.33	0.17	0.124	(0.186)	0.044	0.079
41	3.42	0.17	0.124	(0.185)	0.044	0.079
42	3.50	0.17	0.124	(0.185)	0.044	0.079
43	3.58	0.17	0.124	(0.184)	0.044	0.079
44	3.67	0.17	0.124	(0.183)	0.044	0.079
45	3.75	0.17	0.124	(0.182)	0.044	0.079
46	3.83	0.20	0.148	(0.181)	0.053	0.095
47	3.92	0.20	0.148	(0.181)	0.053	0.095
48	4.00	0.20	0.148	(0.180)	0.053	0.095
49	4.08	0.20	0.148	(0.179)	0.053	0.095
50	4.17	0.20	0.148	(0.178)	0.053	0.095
51	4.25	0.20	0.148	(0.178)	0.053	0.095
52	4.33	0.23	0.173	(0.177)	0.062	0.111
53	4.42	0.23	0.173	(0.176)	0.062	0.111
54	4.50	0.23	0.173	(0.175)	0.062	0.111
55	4.58	0.23	0.173	(0.175)	0.062	0.111
56	4.67	0.23	0.173	(0.174)	0.062	0.111
57	4.75	0.23	0.173	(0.173)	0.062	0.111
58	4.83	0.27	0.198	(0.172)	0.071	0.127
59	4.92	0.27	0.198	(0.172)	0.071	0.127
60	5.00	0.27	0.198	(0.171)	0.071	0.127
61	5.08	0.20	0.148	(0.170)	0.053	0.095
62	5.17	0.20	0.148	(0.169)	0.053	0.095
63	5.25	0.20	0.148	(0.169)	0.053	0.095
64	5.33	0.23	0.173	(0.168)	0.062	0.111
65	5.42	0.23	0.173	(0.167)	0.062	0.111
66	5.50	0.23	0.173	(0.166)	0.062	0.111
67	5.58	0.27	0.198	(0.166)	0.071	0.127
68	5.67	0.27	0.198	(0.165)	0.071	0.127
69	5.75	0.27	0.198	(0.164)	0.071	0.127
70	5.83	0.27	0.198	(0.164)	0.071	0.127
71	5.92	0.27	0.198	(0.163)	0.071	0.127
72	6.00	0.27	0.198	(0.162)	0.071	0.127
73	6.08	0.30	0.222	(0.161)	0.079	0.143
74	6.17	0.30	0.222	(0.161)	0.079	0.143
75	6.25	0.30	0.222	(0.160)	0.079	0.143
76	6.33	0.30	0.222	(0.159)	0.079	0.143
77	6.42	0.30	0.222	(0.159)	0.079	0.143
78	6.50	0.30	0.222	(0.158)	0.079	0.143
79	6.58	0.33	0.247	(0.157)	0.088	0.159
80	6.67	0.33	0.247	(0.156)	0.088	0.159
81	6.75	0.33	0.247	(0.156)	0.088	0.159
82	6.83	0.33	0.247	(0.155)	0.088	0.159
83	6.92	0.33	0.247	(0.154)	0.088	0.159
84	7.00	0.33	0.247	(0.154)	0.088	0.159
85	7.08	0.33	0.247	(0.153)	0.088	0.159
86	7.17	0.33	0.247	(0.152)	0.088	0.159
87	7.25	0.33	0.247	(0.151)	0.088	0.159
88	7.33	0.37	0.272	(0.151)	0.097	0.175
89	7.42	0.37	0.272	(0.150)	0.097	0.175

90	7.50	0.37	0.272	(	0.149)		0.097	0.175
91	7.58	0.40	0.297	(	0.149)		0.106	0.191
92	7.67	0.40	0.297	(	0.148)		0.106	0.191
93	7.75	0.40	0.297	(	0.147)		0.106	0.191
94	7.83	0.43	0.321	(	0.147)		0.115	0.207
95	7.92	0.43	0.321	(	0.146)		0.115	0.207
96	8.00	0.43	0.321	(	0.145)		0.115	0.207
97	8.08	0.50	0.371	(	0.145)		0.132	0.238
98	8.17	0.50	0.371	(	0.144)		0.132	0.238
99	8.25	0.50	0.371	(	0.143)		0.132	0.238
100	8.33	0.50	0.371	(	0.143)		0.132	0.238
101	8.42	0.50	0.371	(	0.142)		0.132	0.238
102	8.50	0.50	0.371	(	0.141)		0.132	0.238
103	8.58	0.53	0.395		0.141	(	0.141)	0.255
104	8.67	0.53	0.395		0.140	(	0.141)	0.255
105	8.75	0.53	0.395		0.139	(	0.141)	0.256
106	8.83	0.57	0.420		0.139	(	0.150)	0.282
107	8.92	0.57	0.420		0.138	(	0.150)	0.282
108	9.00	0.57	0.420		0.137	(	0.150)	0.283
109	9.08	0.63	0.470		0.137	(	0.168)	0.333
110	9.17	0.63	0.470		0.136	(	0.168)	0.334
111	9.25	0.63	0.470		0.135	(	0.168)	0.334
112	9.33	0.67	0.494		0.135	(	0.176)	0.360
113	9.42	0.67	0.494		0.134	(	0.176)	0.360
114	9.50	0.67	0.494		0.133	(	0.176)	0.361
115	9.58	0.70	0.519		0.133	(	0.185)	0.386
116	9.67	0.70	0.519		0.132	(	0.185)	0.387
117	9.75	0.70	0.519		0.132	(	0.185)	0.387
118	9.83	0.73	0.544		0.131	(	0.194)	0.413
119	9.92	0.73	0.544		0.130	(	0.194)	0.413
120	10.00	0.73	0.544		0.130	(	0.194)	0.414
121	10.08	0.50	0.371		0.129	(	0.132)	0.242
122	10.17	0.50	0.371		0.128	(	0.132)	0.242
123	10.25	0.50	0.371		0.128	(	0.132)	0.243
124	10.33	0.50	0.371		0.127	(	0.132)	0.244
125	10.42	0.50	0.371		0.127	(	0.132)	0.244
126	10.50	0.50	0.371		0.126	(	0.132)	0.245
127	10.58	0.67	0.494		0.125	(	0.176)	0.369
128	10.67	0.67	0.494		0.125	(	0.176)	0.370
129	10.75	0.67	0.494		0.124	(	0.176)	0.370
130	10.83	0.67	0.494		0.123	(	0.176)	0.371
131	10.92	0.67	0.494		0.123	(	0.176)	0.371
132	11.00	0.67	0.494		0.122	(	0.176)	0.372
133	11.08	0.63	0.470		0.122	(	0.168)	0.348
134	11.17	0.63	0.470		0.121	(	0.168)	0.349
135	11.25	0.63	0.470		0.120	(	0.168)	0.349
136	11.33	0.63	0.470		0.120	(	0.168)	0.350
137	11.42	0.63	0.470		0.119	(	0.168)	0.350
138	11.50	0.63	0.470		0.119	(	0.168)	0.351
139	11.58	0.57	0.420		0.118	(	0.150)	0.302
140	11.67	0.57	0.420		0.118	(	0.150)	0.303
141	11.75	0.57	0.420		0.117	(	0.150)	0.303
142	11.83	0.60	0.445		0.116	(	0.159)	0.329
143	11.92	0.60	0.445		0.116	(	0.159)	0.329
144	12.00	0.60	0.445		0.115	(	0.159)	0.330
145	12.08	0.83	0.618		0.115	(	0.221)	0.503
146	12.17	0.83	0.618		0.114	(	0.221)	0.504
147	12.25	0.83	0.618		0.113	(	0.221)	0.504
148	12.33	0.87	0.643		0.113	(	0.229)	0.530
149	12.42	0.87	0.643		0.112	(	0.229)	0.530
150	12.50	0.87	0.643		0.112	(	0.229)	0.531
151	12.58	0.93	0.692		0.111	(	0.247)	0.581
152	12.67	0.93	0.692		0.111	(	0.247)	0.581
153	12.75	0.93	0.692		0.110	(	0.247)	0.582
154	12.83	0.97	0.717		0.110	(	0.256)	0.607
155	12.92	0.97	0.717		0.109	(	0.256)	0.608

156	13.00	0.97	0.717	0.108	(0.256)	0.608
157	13.08	1.13	0.840	0.108	(0.300)	0.732
158	13.17	1.13	0.840	0.107	(0.300)	0.733
159	13.25	1.13	0.840	0.107	(0.300)	0.734
160	13.33	1.13	0.840	0.106	(0.300)	0.734
161	13.42	1.13	0.840	0.106	(0.300)	0.735
162	13.50	1.13	0.840	0.105	(0.300)	0.735
163	13.58	0.77	0.568	0.105	(0.203)	0.464
164	13.67	0.77	0.568	0.104	(0.203)	0.464
165	13.75	0.77	0.568	0.104	(0.203)	0.465
166	13.83	0.77	0.568	0.103	(0.203)	0.465
167	13.92	0.77	0.568	0.103	(0.203)	0.466
168	14.00	0.77	0.568	0.102	(0.203)	0.466
169	14.08	0.90	0.667	0.101	(0.238)	0.566
170	14.17	0.90	0.667	0.101	(0.238)	0.566
171	14.25	0.90	0.667	0.100	(0.238)	0.567
172	14.33	0.87	0.643	0.100	(0.229)	0.543
173	14.42	0.87	0.643	0.099	(0.229)	0.543
174	14.50	0.87	0.643	0.099	(0.229)	0.544
175	14.58	0.87	0.643	0.098	(0.229)	0.544
176	14.67	0.87	0.643	0.098	(0.229)	0.545
177	14.75	0.87	0.643	0.097	(0.229)	0.545
178	14.83	0.83	0.618	0.097	(0.221)	0.521
179	14.92	0.83	0.618	0.096	(0.221)	0.521
180	15.00	0.83	0.618	0.096	(0.221)	0.522
181	15.08	0.80	0.593	0.095	(0.212)	0.498
182	15.17	0.80	0.593	0.095	(0.212)	0.498
183	15.25	0.80	0.593	0.094	(0.212)	0.499
184	15.33	0.77	0.568	0.094	(0.203)	0.475
185	15.42	0.77	0.568	0.093	(0.203)	0.475
186	15.50	0.77	0.568	0.093	(0.203)	0.475
187	15.58	0.63	0.470	0.093	(0.168)	0.377
188	15.67	0.63	0.470	0.092	(0.168)	0.378
189	15.75	0.63	0.470	0.092	(0.168)	0.378
190	15.83	0.63	0.470	0.091	(0.168)	0.378
191	15.92	0.63	0.470	0.091	(0.168)	0.379
192	16.00	0.63	0.470	0.090	(0.168)	0.379
193	16.08	0.13	0.099	(0.090)	0.035	0.064
194	16.17	0.13	0.099	(0.089)	0.035	0.064
195	16.25	0.13	0.099	(0.089)	0.035	0.064
196	16.33	0.13	0.099	(0.088)	0.035	0.064
197	16.42	0.13	0.099	(0.088)	0.035	0.064
198	16.50	0.13	0.099	(0.087)	0.035	0.064
199	16.58	0.10	0.074	(0.087)	0.026	0.048
200	16.67	0.10	0.074	(0.087)	0.026	0.048
201	16.75	0.10	0.074	(0.086)	0.026	0.048
202	16.83	0.10	0.074	(0.086)	0.026	0.048
203	16.92	0.10	0.074	(0.085)	0.026	0.048
204	17.00	0.10	0.074	(0.085)	0.026	0.048
205	17.08	0.17	0.124	(0.084)	0.044	0.079
206	17.17	0.17	0.124	(0.084)	0.044	0.079
207	17.25	0.17	0.124	(0.084)	0.044	0.079
208	17.33	0.17	0.124	(0.083)	0.044	0.079
209	17.42	0.17	0.124	(0.083)	0.044	0.079
210	17.50	0.17	0.124	(0.082)	0.044	0.079
211	17.58	0.17	0.124	(0.082)	0.044	0.079
212	17.67	0.17	0.124	(0.081)	0.044	0.079
213	17.75	0.17	0.124	(0.081)	0.044	0.079
214	17.83	0.13	0.099	(0.081)	0.035	0.064
215	17.92	0.13	0.099	(0.080)	0.035	0.064
216	18.00	0.13	0.099	(0.080)	0.035	0.064
217	18.08	0.13	0.099	(0.079)	0.035	0.064
218	18.17	0.13	0.099	(0.079)	0.035	0.064
219	18.25	0.13	0.099	(0.079)	0.035	0.064
220	18.33	0.13	0.099	(0.078)	0.035	0.064
221	18.42	0.13	0.099	(0.078)	0.035	0.064

222	18.50	0.13	0.099	(0.078)	0.035	0.064
223	18.58	0.10	0.074	(0.077)	0.026	0.048
224	18.67	0.10	0.074	(0.077)	0.026	0.048
225	18.75	0.10	0.074	(0.076)	0.026	0.048
226	18.83	0.07	0.049	(0.076)	0.018	0.032
227	18.92	0.07	0.049	(0.076)	0.018	0.032
228	19.00	0.07	0.049	(0.075)	0.018	0.032
229	19.08	0.10	0.074	(0.075)	0.026	0.048
230	19.17	0.10	0.074	(0.075)	0.026	0.048
231	19.25	0.10	0.074	(0.074)	0.026	0.048
232	19.33	0.13	0.099	(0.074)	0.035	0.064
233	19.42	0.13	0.099	(0.074)	0.035	0.064
234	19.50	0.13	0.099	(0.073)	0.035	0.064
235	19.58	0.10	0.074	(0.073)	0.026	0.048
236	19.67	0.10	0.074	(0.073)	0.026	0.048
237	19.75	0.10	0.074	(0.072)	0.026	0.048
238	19.83	0.07	0.049	(0.072)	0.018	0.032
239	19.92	0.07	0.049	(0.072)	0.018	0.032
240	20.00	0.07	0.049	(0.071)	0.018	0.032
241	20.08	0.10	0.074	(0.071)	0.026	0.048
242	20.17	0.10	0.074	(0.071)	0.026	0.048
243	20.25	0.10	0.074	(0.070)	0.026	0.048
244	20.33	0.10	0.074	(0.070)	0.026	0.048
245	20.42	0.10	0.074	(0.070)	0.026	0.048
246	20.50	0.10	0.074	(0.069)	0.026	0.048
247	20.58	0.10	0.074	(0.069)	0.026	0.048
248	20.67	0.10	0.074	(0.069)	0.026	0.048
249	20.75	0.10	0.074	(0.069)	0.026	0.048
250	20.83	0.07	0.049	(0.068)	0.018	0.032
251	20.92	0.07	0.049	(0.068)	0.018	0.032
252	21.00	0.07	0.049	(0.068)	0.018	0.032
253	21.08	0.10	0.074	(0.068)	0.026	0.048
254	21.17	0.10	0.074	(0.067)	0.026	0.048
255	21.25	0.10	0.074	(0.067)	0.026	0.048
256	21.33	0.07	0.049	(0.067)	0.018	0.032
257	21.42	0.07	0.049	(0.066)	0.018	0.032
258	21.50	0.07	0.049	(0.066)	0.018	0.032
259	21.58	0.10	0.074	(0.066)	0.026	0.048
260	21.67	0.10	0.074	(0.066)	0.026	0.048
261	21.75	0.10	0.074	(0.066)	0.026	0.048
262	21.83	0.07	0.049	(0.065)	0.018	0.032
263	21.92	0.07	0.049	(0.065)	0.018	0.032
264	22.00	0.07	0.049	(0.065)	0.018	0.032
265	22.08	0.10	0.074	(0.065)	0.026	0.048
266	22.17	0.10	0.074	(0.064)	0.026	0.048
267	22.25	0.10	0.074	(0.064)	0.026	0.048
268	22.33	0.07	0.049	(0.064)	0.018	0.032
269	22.42	0.07	0.049	(0.064)	0.018	0.032
270	22.50	0.07	0.049	(0.064)	0.018	0.032
271	22.58	0.07	0.049	(0.063)	0.018	0.032
272	22.67	0.07	0.049	(0.063)	0.018	0.032
273	22.75	0.07	0.049	(0.063)	0.018	0.032
274	22.83	0.07	0.049	(0.063)	0.018	0.032
275	22.92	0.07	0.049	(0.063)	0.018	0.032
276	23.00	0.07	0.049	(0.063)	0.018	0.032
277	23.08	0.07	0.049	(0.062)	0.018	0.032
278	23.17	0.07	0.049	(0.062)	0.018	0.032
279	23.25	0.07	0.049	(0.062)	0.018	0.032
280	23.33	0.07	0.049	(0.062)	0.018	0.032
281	23.42	0.07	0.049	(0.062)	0.018	0.032
282	23.50	0.07	0.049	(0.062)	0.018	0.032
283	23.58	0.07	0.049	(0.062)	0.018	0.032
284	23.67	0.07	0.049	(0.062)	0.018	0.032
285	23.75	0.07	0.049	(0.062)	0.018	0.032
286	23.83	0.07	0.049	(0.061)	0.018	0.032
287	23.92	0.07	0.049	(0.061)	0.018	0.032

```
288  24.00     0.07      0.049       (  0.061)       0.018        0.032
             (Loss Rate Not Used)
    Sum =     100.0                                    Sum =    55.1
      Flood volume = Effective rainfall      4.59(In)
       times area      85.6(Ac.)/[(In)/(Ft.)] =      32.8(Ac.Ft)
      Total soil loss =      1.58(In)
      Total soil loss =    11.305(Ac.Ft)
      Total rainfall =      6.18(In)
      Flood volume =     1427553.6 Cubic Feet
      Total soil loss =      492424.4 Cubic Feet
      --------------------------------------------------------------------
       Peak flow rate of this hydrograph =     63.259(CFS)
      --------------------------------------------------------------------
      ++++++++++++++++++++++++++++++++++++++++++++++++++++++++++++++++++++
                          24 - H O U R    S T O R M
                     R u n o f f      H y d r o g r a p h
      --------------------------------------------------------------------
                  Hydrograph in   5   Minute intervals ((CFS))

      --------------------------------------------------------------------
 Time(h+m) Volume Ac.Ft   Q(CFS)  0       17.5      35.0      52.5      70.0
 ----------------------------------------------------------------------
   0+ 5       0.0020      0.30  Q         |         |         |         |
   0+10       0.0140      1.74  Q         |         |         |         |
   0+15       0.0301      2.33  VQ        |         |         |         |
   0+20       0.0488      2.72  VQ        |         |         |         |
   0+25       0.0733      3.55  V Q       |         |         |         |
   0+30       0.1000      3.88  V Q       |         |         |         |
   0+35       0.1276      4.02  V Q       |         |         |         |
   0+40       0.1558      4.08  V Q       |         |         |         |
   0+45       0.1840      4.10  V Q       |         |         |         |
   0+50       0.2133      4.26  V Q       |         |         |         |
   0+55       0.2476      4.99  V Q       |         |         |         |
   1+ 0       0.2840      5.28  V  Q      |         |         |         |
   1+ 5       0.3202      5.25  V  Q      |         |         |         |
   1+10       0.3518      4.58  V Q       |         |         |         |
   1+15       0.3814      4.31  V Q       |         |         |         |
   1+20       0.4103      4.19  V Q       |         |         |         |
   1+25       0.4389      4.15  V Q       |         |         |         |
   1+30       0.4673      4.13  V Q       |         |         |         |
   1+35       0.4957      4.12  V Q       |         |         |         |
   1+40       0.5240      4.12  V Q       |         |         |         |
   1+45       0.5524      4.12  V Q       |         |         |         |
   1+50       0.5817      4.26  V Q       |         |         |         |
   1+55       0.6161      4.99  V Q       |         |         |         |
   2+ 0       0.6525      5.28  V  Q      |         |         |         |
   2+ 5       0.6896      5.40  V  Q      |         |         |         |
   2+10       0.7272      5.45  V  Q      |         |         |         |
   2+15       0.7649      5.47  V  Q      |         |         |         |
   2+20       0.8026      5.48  V  Q      |         |         |         |
   2+25       0.8404      5.49  |V Q      |         |         |         |
   2+30       0.8782      5.49  |V Q      |         |         |         |
   2+35       0.9170      5.64  |V Q      |         |         |         |
   2+40       0.9608      6.36  |V Q      |         |         |         |
   2+45       1.0066      6.65  |V Q      |         |         |         |
   2+50       1.0533      6.77  |V Q      |         |         |         |
   2+55       1.1003      6.83  |V Q      |         |         |         |
   3+ 0       1.1474      6.84  |V Q      |         |         |         |
   3+ 5       1.1946      6.85  |V Q      |         |         |         |
   3+10       1.2418      6.86  |V Q      |         |         |         |
   3+15       1.2891      6.86  |V Q      |         |         |         |
   3+20       1.3363      6.86  |V Q      |         |         |         |
   3+25       1.3835      6.86  |V Q      |         |         |         |
   3+30       1.4308      6.86  |V Q      |         |         |         |
   3+35       1.4780      6.86  |V Q      |         |         |         |
   3+40       1.5252      6.86  |V Q      |         |         |         |
```

```
3+45       1.5725      6.86  |V Q      |         |         |         |
3+50       1.6207      7.01  |V  Q     |         |         |         |
3+55       1.6740      7.73  | V Q     |         |         |         |
4+ 0       1.7292      8.02  | V Q     |         |         |         |
4+ 5       1.7853      8.14  | V Q     |         |         |         |
4+10       1.8418      8.20  | V Q     |         |         |         |
4+15       1.8984      8.21  | V Q     |         |         |         |
4+20       1.9560      8.37  | V Q     |         |         |         |
4+25       2.0187      9.10  | V  Q    |         |         |         |
4+30       2.0834      9.40  | V  Q    |         |         |         |
4+35       2.1489      9.52  | V  Q    |         |         |         |
4+40       2.2149      9.57  | V  Q    |         |         |         |
4+45       2.2809      9.59  | V  Q    |         |         |         |
4+50       2.3480      9.74  | V  Q    |         |         |         |
4+55       2.4201     10.47  | V  Q    |         |         |         |
5+ 0       2.4943     10.77  |  V  Q   |         |         |         |
5+ 5       2.5672     10.59  |  V  Q   |         |         |         |
5+10       2.6305      9.20  |  V Q    |         |         |         |
5+15       2.6900      8.63  |  VQ     |         |         |         |
5+20       2.7488      8.54  |  VQ     |         |         |         |
5+25       2.8119      9.17  |  V Q    |         |         |         |
5+30       2.8769      9.43  |  V Q    |         |         |         |
5+35       2.9435      9.68  |  V Q    |         |         |         |
5+40       3.0154     10.44  |  V Q    |         |         |         |
5+45       3.0895     10.75  |  V  Q   |         |         |         |
5+50       3.1644     10.88  |  V  Q   |         |         |         |
5+55       3.2398     10.94  |  V  Q   |         |         |         |
6+ 0       3.3152     10.96  |   V Q   |         |         |         |
6+ 5       3.3918     11.11  |   V Q   |         |         |         |
6+10       3.4734     11.85  |   V Q   |         |         |         |
6+15       3.5570     12.14  |   V Q   |         |         |         |
6+20       3.6414     12.26  |   V  Q  |         |         |         |
6+25       3.7262     12.31  |   V  Q  |         |         |         |
6+30       3.8111     12.33  |   V  Q  |         |         |         |
6+35       3.8971     12.49  |   V  Q  |         |         |         |
6+40       3.9881     13.22  |   V  Q  |         |         |         |
6+45       4.0812     13.51  |   V  Q  |         |         |         |
6+50       4.1751     13.63  |    V Q  |         |         |         |
6+55       4.2693     13.68  |    V Q  |         |         |         |
7+ 0       4.3637     13.70  |    V Q  |         |         |         |
7+ 5       4.4581     13.71  |    V Q  |         |         |         |
7+10       4.5526     13.72  |    V Q  |         |         |         |
7+15       4.6470     13.72  |    V Q  |         |         |         |
7+20       4.7425     13.87  |    V Q  |         |         |         |
7+25       4.8430     14.59  |    V  Q |         |         |         |
7+30       4.9455     14.88  |     V Q |         |         |         |
7+35       5.0499     15.15  |     V Q |         |         |         |
7+40       5.1595     15.93  |     V  Q|         |         |         |
7+45       5.2714     16.24  |     V  Q|         |         |         |
7+50       5.3851     16.52  |     V  Q|         |         |         |
7+55       5.5043     17.30  |     V  Q|         |         |         |
8+ 0       5.6256     17.61  |     V   Q         |         |         |
8+ 5       5.7498     18.04  |      V  Q         |         |         |
8+10       5.8844     19.54  |      V  |Q        |         |         |
8+15       6.0231     20.15  |      V  |Q        |         |         |
8+20       6.1636     20.40  |      V  |Q        |         |         |
8+25       6.3049     20.51  |      V  |Q        |         |         |
8+30       6.4463     20.54  |      V  |Q        |         |         |
8+35       6.5890     20.71  |       V |Q        |         |         |
8+40       6.7370     21.48  |       V | Q       |         |         |
8+45       6.8873     21.82  |       V | Q       |         |         |
8+50       7.0403     22.23  |       V | Q       |         |         |
8+55       7.2019     23.46  |       V |  Q      |         |         |
9+ 0       7.3671     23.99  |       V |  Q      |         |         |
9+ 5       7.5373     24.70  |        V|   Q     |         |         |
9+10       7.7239     27.10  |        V|    Q    |         |         |
```

```
 9+15       7.9174     28.09  |         V|     Q   |          |          |
 9+20       8.1155     28.77  |         V|     Q   |          |          |
 9+25       8.3230     30.13  |          V      Q  |          |          |
 9+30       8.5344     30.69  |          V      Q  |          |          |
 9+35       8.7492     31.19  |          V      Q  |          |          |
 9+40       8.9729     32.48  |          V       Q |          |          |
 9+45       9.2003     33.02  |          |V      Q |          |          |
 9+50       9.4310     33.50  |          |V       Q|          |          |
 9+55       9.6705     34.78  |          |V       Q|          |          |
10+ 0       9.9137     35.31  |          | V       Q         |          |
10+ 5      10.1475     33.95  |          | V      Q|         |          |
10+10      10.3282     26.23  |          | V Q     |         |          |
10+15      10.4873     23.11  |          | VQ      |         |          |
10+20      10.6379     21.86  |          | Q       |         |          |
10+25      10.7849     21.35  |          | QV      |         |          |
10+30      10.9311     21.22  |          | QV      |         |          |
10+35      11.0849     22.33  |          | QV      |         |          |
10+40      11.2773     27.93  |          |  V Q    |         |          |
10+45      11.4858     30.27  |          |   V  Q  |         |          |
10+50      11.7011     31.26  |          |   V  Q  |         |          |
10+55      11.9196     31.73  |          |   V   Q |         |          |
11+ 0      12.1393     31.91  |          |   V   Q |         |          |
11+ 5      12.3583     31.80  |          |    V  Q |         |          |
11+10      12.5703     30.78  |          |    V Q  |         |          |
11+15      12.7795     30.38  |          |    V Q  |         |          |
11+20      12.9878     30.24  |          |    V Q  |         |          |
11+25      13.1958     30.21  |          |     VQ  |         |          |
11+30      13.4041     30.24  |          |     VQ  |         |          |
11+35      13.6094     29.81  |          |     VQ  |         |          |
11+40      13.7995     27.60  |          |    QV   |         |          |
11+45      13.9836     26.74  |          |    Q V  |         |          |
11+50      14.1671     26.64  |          |    Q V  |         |          |
11+55      14.3576     27.65  |          |    Q V  |         |          |
12+ 0      14.5511     28.11  |          |     QV  |         |          |
12+ 5      14.7573     29.93  |          |      QV |         |          |
12+10      15.0185     37.92  |          |       V |Q        |          |
12+15      15.3022     41.19  |          |       V |  Q      |          |
12+20      15.5969     42.80  |          |        V|   Q     |          |
12+25      15.9038     44.56  |          |        V|    Q    |          |
12+30      16.2155     45.25  |          |        V|    Q    |          |
12+35      16.5326     46.04  |          |         V     Q  |          |
12+40      16.8666     48.50  |          |         V      Q |          |
12+45      17.2074     49.49  |          |         |V      Q |          |
12+50      17.5529     50.16  |          |         |V      Q |          |
12+55      17.9076     51.51  |          |         |V       Q|          |
13+ 0      18.2662     52.06  |          |         | V      Q|          |
13+ 5      18.6345     53.48  |          |         | V       Q         |
13+10      19.0426     59.26  |          |         |  V      |  Q      |
13+15      19.4670     61.62  |          |         |  V      |    Q    |
13+20      19.8982     62.61  |          |         |   V     |    Q    |
13+25      20.3326     63.08  |          |         |   V     |     Q   |
13+30      20.7683     63.26  |          |         |    V    |     Q   |
13+35      21.1873     60.84  |          |         |    V    |   Q     |
13+40      21.5218     48.57  |          |         |     VQ  |         |
13+45      21.8220     43.58  |          |         |   Q V   |         |
13+50      22.1082     41.57  |          |         |  Q  V   |         |
13+55      22.3886     40.71  |          |         |  Q   V  |         |
14+ 0      22.6673     40.47  |          |         |  Q   V  |         |
14+ 5      22.9516     41.28  |          |         |  Q    V |         |
14+10      23.2664     45.71  |          |         |     Q V |         |
14+15      23.5941     47.58  |          |         |      QV |         |
14+20      23.9256     48.14  |          |         |      Q V|         |
14+25      24.2520     47.39  |          |         |      Q V|         |
14+30      24.5763     47.08  |          |         |     Q  V|         |
14+35      24.9000     47.00  |          |         |     Q   V         |
14+40      25.2237     47.00  |          |         |     Q   V         |
```

14+45	25.5475	47.02			Q	V
14+50	25.8699	46.82			Q	V
14+55	26.1848	45.72			Q	V
15+ 0	26.4969	45.31			Q	V
15+ 5	26.8064	44.94			Q	V
15+10	27.1078	43.77			Q	V
15+15	27.4062	43.33			Q	V
15+20	27.7020	42.94			Q	V
15+25	27.9896	41.76			Q	V
15+30	28.2742	41.32			Q	V
15+35	28.5513	40.24			Q	V
15+40	28.7971	35.69		Q		V
15+45	29.0304	33.88		Q		V
15+50	29.2587	33.15		Q		V
15+55	29.4850	32.85		Q		V
16+ 0	29.7108	32.79		Q		V
16+ 5	29.9162	29.82		Q		V
16+10	30.0223	15.42	Q			V
16+15	30.0883	9.58	Q			V
16+20	30.1378	7.19	Q			V
16+25	30.1801	6.13	Q			V
16+30	30.2201	5.81	Q			V
16+35	30.2578	5.48	Q			V
16+40	30.2896	4.62	Q			V
16+45	30.3193	4.32	Q			V
16+50	30.3483	4.20	Q			V
16+55	30.3768	4.15	Q			V
17+ 0	30.4053	4.13	Q			V
17+ 5	30.4357	4.42	Q			V
17+10	30.4761	5.86	Q			V
17+15	30.5205	6.45	Q			V
17+20	30.5665	6.69	Q			V
17+25	30.6133	6.79	Q			V
17+30	30.6603	6.83	Q			V
17+35	30.7075	6.84	Q			V
17+40	30.7547	6.86	Q			V
17+45	30.8019	6.86	Q			V
17+50	30.8482	6.71	Q			V
17+55	30.8894	5.99	Q			V
18+ 0	30.9286	5.69	Q			V
18+ 5	30.9670	5.57	Q			V
18+10	31.0050	5.52	Q			V
18+15	31.0429	5.50	Q			V
18+20	31.0807	5.49	Q			V
18+25	31.1185	5.49	Q			V
18+30	31.1563	5.49	Q			V
18+35	31.1931	5.34	Q			V
18+40	31.2248	4.62	Q			V
18+45	31.2546	4.32	Q			V
18+50	31.2825	4.05	Q			V
18+55	31.3051	3.28	Q			V
19+ 0	31.3255	2.97	Q			V
19+ 5	31.3461	2.98	Q			V
19+10	31.3712	3.65	Q			V
19+15	31.3982	3.93	Q			V
19+20	31.4270	4.18	Q			V
19+25	31.4612	4.95	Q			V
19+30	31.4974	5.26	Q			V
19+35	31.5335	5.25	Q			V
19+40	31.5651	4.58	Q			V
19+45	31.5948	4.31	Q			V
19+50	31.6226	4.05	Q			V
19+55	31.6452	3.28	Q			V
20+ 0	31.6656	2.97	Q			V
20+ 5	31.6862	2.98	Q			V
20+10	31.7113	3.65	Q			V

```
   20+15      31.7383      3.93  | Q       |         |         |       V |
   20+20      31.7661      4.04  | Q       |         |         |       V |
   20+25      31.7942      4.08  | Q       |         |         |       V |
   20+30      31.8225      4.10  | Q       |         |         |       V |
   20+35      31.8508      4.11  | Q       |         |         |       V |
   20+40      31.8791      4.12  | Q       |         |         |       V |
   20+45      31.9074      4.12  | Q       |         |         |       V |
   20+50      31.9348      3.97  | Q       |         |         |       V |
   20+55      31.9571      3.24  |Q        |         |         |        V|
   21+ 0      31.9774      2.95  |Q        |         |         |        V|
   21+ 5      31.9979      2.98  |Q        |         |         |        V|
   21+10      32.0230      3.65  | Q       |         |         |        V|
   21+15      32.0501      3.93  | Q       |         |         |        V|
   21+20      32.0768      3.89  | Q       |         |         |        V|
   21+25      32.0990      3.21  |Q        |         |         |        V|
   21+30      32.1192      2.93  |Q        |         |         |        V|
   21+35      32.1396      2.97  |Q        |         |         |        V|
   21+40      32.1647      3.65  | Q       |         |         |        V|
   21+45      32.1918      3.93  | Q       |         |         |        V|
   21+50      32.2185      3.89  | Q       |         |         |        V|
   21+55      32.2407      3.21  |Q        |         |         |        V|
   22+ 0      32.2609      2.93  |Q        |         |         |        V|
   22+ 5      32.2813      2.97  |Q        |         |         |        V|
   22+10      32.3064      3.65  | Q       |         |         |        V|
   22+15      32.3335      3.93  | Q       |         |         |        V|
   22+20      32.3603      3.89  | Q       |         |         |        V|
   22+25      32.3824      3.21  |Q        |         |         |        V|
   22+30      32.4026      2.93  |Q        |         |         |        V|
   22+35      32.4220      2.82  |Q        |         |         |        V|
   22+40      32.4411      2.78  |Q        |         |         |        V|
   22+45      32.4601      2.76  |Q        |         |         |        V|
   22+50      32.4791      2.75  |Q        |         |         |        V|
   22+55      32.4980      2.74  |Q        |         |         |        V|
   23+ 0      32.5169      2.74  |Q        |         |         |        V|
   23+ 5      32.5358      2.74  |Q        |         |         |        V|
   23+10      32.5547      2.74  |Q        |         |         |        V|
   23+15      32.5735      2.74  |Q        |         |         |        V|
   23+20      32.5924      2.74  |Q        |         |         |        V|
   23+25      32.6113      2.74  |Q        |         |         |        V|
   23+30      32.6302      2.74  |Q        |         |         |        V|
   23+35      32.6491      2.74  |Q        |         |         |        V|
   23+40      32.6680      2.74  |Q        |         |         |        V|
   23+45      32.6869      2.74  |Q        |         |         |        V|
   23+50      32.7058      2.74  |Q        |         |         |        V|
   23+55      32.7247      2.74  |Q        |         |         |        V|
   24+ 0      32.7436      2.74  |Q        |         |         |        V|
   24+ 5      32.7604      2.45  |Q        |         |         |        V|
   24+10      32.7673      1.00  Q         |         |         |        V|
   24+15      32.7702      0.41  Q         |         |         |        V|
   24+20      32.7714      0.17  Q         |         |         |        V|
   24+25      32.7718      0.07  Q         |         |         |        V|
   24+30      32.7720      0.03  Q         |         |         |        V|
   24+35      32.7721      0.01  Q         |         |         |        V|
----------------------------------------------------------------------
```

Santa Ana River Watershed BMP Sizing Calculations ..... F

Santa Ana Watershed - BMP Design Volume, V_{BMP}

(Rev. 10-2011)

Legend: Required Entries / Calculated Cells

*(Note this worksheet shall **only** be used in conjunction with BMP designs from the **LID BMP Design Handbook**)*

Company Name	Proactive Engineering Consultants West, Inc.	Date	3/30/2021
Designed by	A. Jaramillo	Case No	
Company Project Number/Name	Beaumont Pointe		

BMP Identification

BMP NAME / ID: Area 01/Basin 4

Must match Name/ID used on BMP Design Calculation Sheet

Design Rainfall Depth

85th Percentile, 24-hour Rainfall Depth,
from the Isohyetal Map in Handbook Appendix E

D_{85}= 0.75 inches

Drainage Management Area Tabulation

Insert additional rows if needed to accommodate all DMAs draining to the BMP

DMA Type/ID	DMA Area (square feet)	Post-Project Surface Type	Effective Imperivous Fraction, I_f	DMA Runoff Factor	DMA Areas x Runoff Factor	*Design Storm Depth (in)*	*Design Capture Volume, V_{BMP} (cubic feet)*	*Proposed Volume on Plans (cubic feet)*
Area 1 - Pervious	*360890*	*Ornamental Landscaping*	*0.1*	*0.11*	*39863.2*			
Area 1 - Imperv.	*2722393*	*Concrete or Asphalt*	*1*	*0.89*	*2428374.6*			
	3083283		***Total***		**2468237.8**	**0.75**	***154264.9***	***416869***

Notes:

Santa Ana Watershed - BMP Design Volume, V_{BMP}

(Rev. 10-2011)

Legend: Required Entries / Calculated Cells

*(Note this worksheet shall **only** be used in conjunction with BMP designs from the **LID BMP Design Handbook**)*

Company Name	Proactive Engineering Consultants West, Inc.	Date	3/30/2021
Designed by	A. Jaramillo	Case No	
Company Project Number/Name	Beaumont Pointe		

BMP Identification

BMP NAME / ID: Area 06/Basin 3

Must match Name/ID used on BMP Design Calculation Sheet

Design Rainfall Depth

85th Percentile, 24-hour Rainfall Depth, from the Isohyetal Map in Handbook Appendix E

D_{85}= 0.75 inches

Drainage Management Area Tabulation

Insert additional rows if needed to accommodate all DMAs draining to the BMP

DMA Type/ID	DMA Area (square feet)	Post-Project Surface Type	Effective Imperivous Fraction, I_f	DMA Runoff Factor	DMA Areas x Runoff Factor	*Design Storm Depth (in)*	*Design Capture Volume, V_{BMP} (cubic feet)*	*Proposed Volume on Plans (cubic feet)*
Area 1 - Pervious	*380926*	*Ornamental Landscaping*	*0.1*	*0.11*	*42076.3*			
Area 1 - Imperv.	*1089540*	*Concrete or Asphalt*	*1*	*0.89*	*971869.7*			

Santa Ana Watershed - BMP Design Volume, V_{BMP}

(Rev. 10-2011)

Legend: Required Entries / Calculated Cells

*(Note this worksheet shall **only** be used in conjunction with BMP designs from the **LID BMP Design Handbook**)*

Company Name	Proactive Engineering Consultants West, Inc.	Date	3/30/2021
Designed by	A. Jaramillo	Case No	
Company Project Number/Name	Beaumont Pointe		

BMP Identification

BMP NAME / ID: Area 13/Basin 2

Must match Name/ID used on BMP Design Calculation Sheet

Design Rainfall Depth

85th Percentile, 24-hour Rainfall Depth,
from the Isohyetal Map in Handbook Appendix E

D_{85}= 0.75 inches

Drainage Management Area Tabulation

Insert additional rows if needed to accommodate all DMAs draining to the BMP

DMA Type/ID	DMA Area (square feet)	Post-Project Surface Type	Effective Imperivous Fraction, I_f	DMA Runoff Factor	DMA Areas x Runoff Factor	*Design Storm Depth (in)*	*Design Capture Volume, V_{BMP} (cubic feet)*	*Proposed Volume on Plans (cubic feet)*
Area 1 - Pervious	*844390*	*Ornamental Landscaping*	*0.1*	*0.11*	*93269.6*			
Area 1 - Imperv.	*3020455*	*Concrete or Asphalt*	*1*	*0.89*	*2694245.9*			
	3864845		***Total***		**2787515.5**	**0.75**	***174219.7***	***484823***

Notes:

Santa Ana Watershed - BMP Design Volume, V_{BMP}

(Rev. 10-2011)

Legend: Required Entries / Calculated Cells

*(Note this worksheet shall **only** be used in conjunction with BMP designs from the **LID BMP Design Handbook**)*

Company Name	Proactive Engineering Consultants West, Inc.	Date	3/30/2021
Designed by	A. Jaramillo	Case No	
Company Project Number/Name	Beaumont Pointe		

BMP Identification

BMP NAME / ID: Area 16/Basin 1

Must match Name/ID used on BMP Design Calculation Sheet

Design Rainfall Depth

85th Percentile, 24-hour Rainfall Depth, from the Isohyetal Map in Handbook Appendix E

D_{85}= 0.75 inches

Drainage Management Area Tabulation

Insert additional rows if needed to accommodate all DMAs draining to the BMP

DMA Type/ID	DMA Area (square feet)	Post-Project Surface Type	Effective Imperivous Fraction, I_f	DMA Runoff Factor	DMA Areas x Runoff Factor	*Design Storm Depth (in)*	*Design Capture Volume, V_{BMP} (cubic feet)*	*Proposed Volume on Plans (cubic feet)*
Area 1 - Pervious	*912891*	*Ornamental Landscaping*	*0.1*	*0.11*	*100836.1*			
Area 1 - Imperv.	*2816060*	*Concrete or Asphalt*	*1*	*0.89*	*2511925.5*			
	3728951		***Total***		**2612761.6**	**0.75**	***163297.6***	***447361***

Notes:

Basin 1 Volume - Fustrum of a Pyramid Method

V=1/3*h*(A1+A2+((A1*A2)^0.5))

Input No.	Basin Depth (FT)	Elevation (FT)	Incremental Depth (FT)	Contour Area (SF)	Incremental Volume (CF)	Incremental (AC/FT)	Total Volume (AC/FT)
1	0	**2350.00**	0.33	**68969**			
	0.33	2350.33	0.33	71774	23221	0.53	**0.53**
	0.67	2350.67	0.33	74580	24147	0.55	**1.09**
2	1	**2351.00**	0.33	**77385**	25073	0.58	**1.66**
	1.33	2351.33	0.33	80233	26006	0.60	**2.26**
	1.67	2351.67	0.33	83081	26945	0.62	**2.88**
3	2	**2352.00**	0.33	**85929**	27885	0.64	**3.52**
	2.33	2352.33	0.33	88820	28832	0.66	**4.18**
	2.67	2352.67	0.33	91711	29786	0.68	**4.86**
4	3	**2353.00**	0.33	**94602**	30740	0.71	**5.57**
	3.33	2353.33	0.33	97536	31701	0.73	**6.30**
	3.67	2353.67	0.33	100469	32670	0.75	**7.05**
5	4	**2354.00**	0.33	**103403**	33638	0.77	**7.82**
	4.33	2354.33	0.33	106380	34613	0.79	**8.61**
	4.67	2354.67	0.33	109356	35595	0.82	**9.43**
6	5	**2355.00**	0.33	**112333**	36578	0.84	**10.27**

Basin 2 Volume - Fustrum of a Pyramid Method

V=1/3*h*(A1+A2+((A1*A2)^0.5))

Input No.	Basin Depth (FT)	Elevation (FT)	Incremental Depth (FT)	Contour Area (SF)	Incremental Volume (CF)	Incremental (AC/FT)	Total Volume (AC/FT)	Orifice Depth (ft.)	Orifice Outflow (cfs)	Type X Outlet Q (cfs)	Total Outflow (cfs)
1	0	**2335.00**	0.33	**81335**				0.00	0.00	0.00	**0.00**
	0.33	2335.33	0.33	83497	27196	0.62	**0.62**	0.33	0.61	0.00	**0.61**
	0.67	2335.67	0.33	85658	27910	0.64	**1.27**	0.67	0.87	0.00	**0.87**
2	1	**2336.00**	0.33	**87820**	28623	0.66	**1.92**	1.00	1.07	0.00	**1.07**
	1.33	2336.33	0.33	90026	29344	0.67	**2.60**	1.33	1.23	0.00	**1.23**
	1.67	2336.67	0.33	92232	30072	0.69	**3.29**	1.67	1.38	0.00	**1.38**
3	2	**2337.00**	0.33	**94438**	30800	0.71	**3.99**	2.00	1.51	0.00	**1.51**
4	2.33	2337.33	0.33	96688	31535	0.72	**4.72**	2.33	1.63	0.00	**1.63**
5	2.67	2337.67	0.33	98937	32277	0.74	**5.46**	2.67	1.75	7.47	**9.22**
6	3	**2338.00**	0.33	**101187**	33020	0.76	**6.22**	3.00	1.85	20.67	**22.53**
7	3.33	2338.33	0.33	103481	33770	0.78	**6.99**	3.33	1.95	37.70	**39.65**
8	3.67	2338.67	0.33	105776	34527	0.79	**7.78**	3.67	2.05	58.48	**60.52**
9	4	**2339.00**	0.33	**108070**	35284	0.81	**8.59**	4.00	2.14	81.36	**83.50**
10	4.33	2339.33	0.33	110408	36048	0.83	**9.42**	4.33	2.22	106.63	**108.85**
11	4.67	2339.67	0.33	112746	36820	0.85	**10.27**	4.37	2.23	134.94	**137.18**
12	5	**2340.00**	0.33	**115084**	37591	0.86	**11.13**	5.00	2.39	164.47	**166.86**

Basin 3 Volume - Fustrum of a Pyramid Method

V=1/3*h*(A1+A2+((A1*A2)^0.5))

Input No.	Basin Depth (FT)	Elevation (FT)	Incremental Depth (FT)	Contour Area (SF)	Incremental Volume (CF)	Incremental (AC/FT)	Total Volume (AC/FT)
1	0.00	**2350.00**	0.33	**60763**			
	0.33	2350.33	0.33	63711	20536	0.47	**0.47**
	0.67	2350.67	0.33	66660	21509	0.49	**0.97**
2	1.00	**2351.00**	0.33	**69608**	22482	0.52	**1.48**
	1.33	2351.33	0.33	72603	23463	0.54	**2.02**
	1.67	2351.67	0.33	75598	24452	0.56	**2.58**
3	2.00	**2352.00**	0.33	**78593**	25440	0.58	**3.17**
	2.33	2352.33	0.33	81634	26436	0.61	**3.77**
	2.67	2352.67	0.33	84676	27440	0.63	**4.40**
4	3.00	**2353.00**	0.33	**87717**	28443	0.65	**5.06**
	3.33	2353.33	0.33	90805	29455	0.68	**5.73**
	3.67	2353.67	0.33	93893	30474	0.70	**6.43**
5	4.00	**2354.00**	0.33	**96981**	31493	0.72	**7.15**
	4.33	2354.33	0.33	100115	32520	0.75	**7.90**
	4.67	2354.67	0.33	103250	33554	0.77	**8.67**
6	5.00	**2355.00**	0.33	**106384**	34588	0.79	**9.46**

Basin 4 Volume - Fustrum of a Pyramid Method

V=1/3*h*(A1+A2+((A1*A2)^0.5))

Input No.	Basin Depth (FT)	Elevation (FT)	Incremental Depth (FT)	Contour Area (SF)	Incremental Volume (CF)	Incremental (AC/FT)	Total Volume (AC/FT)
1	0.00	**2362.00**	0.33	**64904**			
	0.33	2362.33	0.33	67220	21799	0.50	**0.50**
	0.67	2362.67	0.33	69536	22564	0.52	**1.02**
2	1.00	**2363.00**	0.33	**71852**	23328	0.54	**1.55**
	1.33	2363.33	0.33	74221	24101	0.55	**2.11**
	1.67	2363.67	0.33	76589	24883	0.57	**2.68**
3	2.00	**2364.00**	0.33	**78958**	25664	0.59	**3.27**
	2.33	2364.33	0.33	81382	26455	0.61	**3.87**
	2.67	2364.67	0.33	83805	27255	0.63	**4.50**
4	3.00	**2365.00**	0.33	**86229**	28055	0.64	**5.14**
	3.33	2365.33	0.33	88713	28864	0.66	**5.81**
	3.67	2365.67	0.33	91197	29684	0.68	**6.49**
5	4.00	**2366.00**	0.33	**93681**	30504	0.70	**7.19**
	4.33	2366.33	0.33	96237	31336	0.72	**7.91**
	4.67	2366.67	0.33	98793	32179	0.74	**8.65**
6	5.00	**2367.00**	0.33	**101349**	33023	0.76	**9.41**

Hydrology Key Map ..... G

- Pre-Developed Key Map
- Developed Key Map
- Developed Unit Hydrograph Key Map

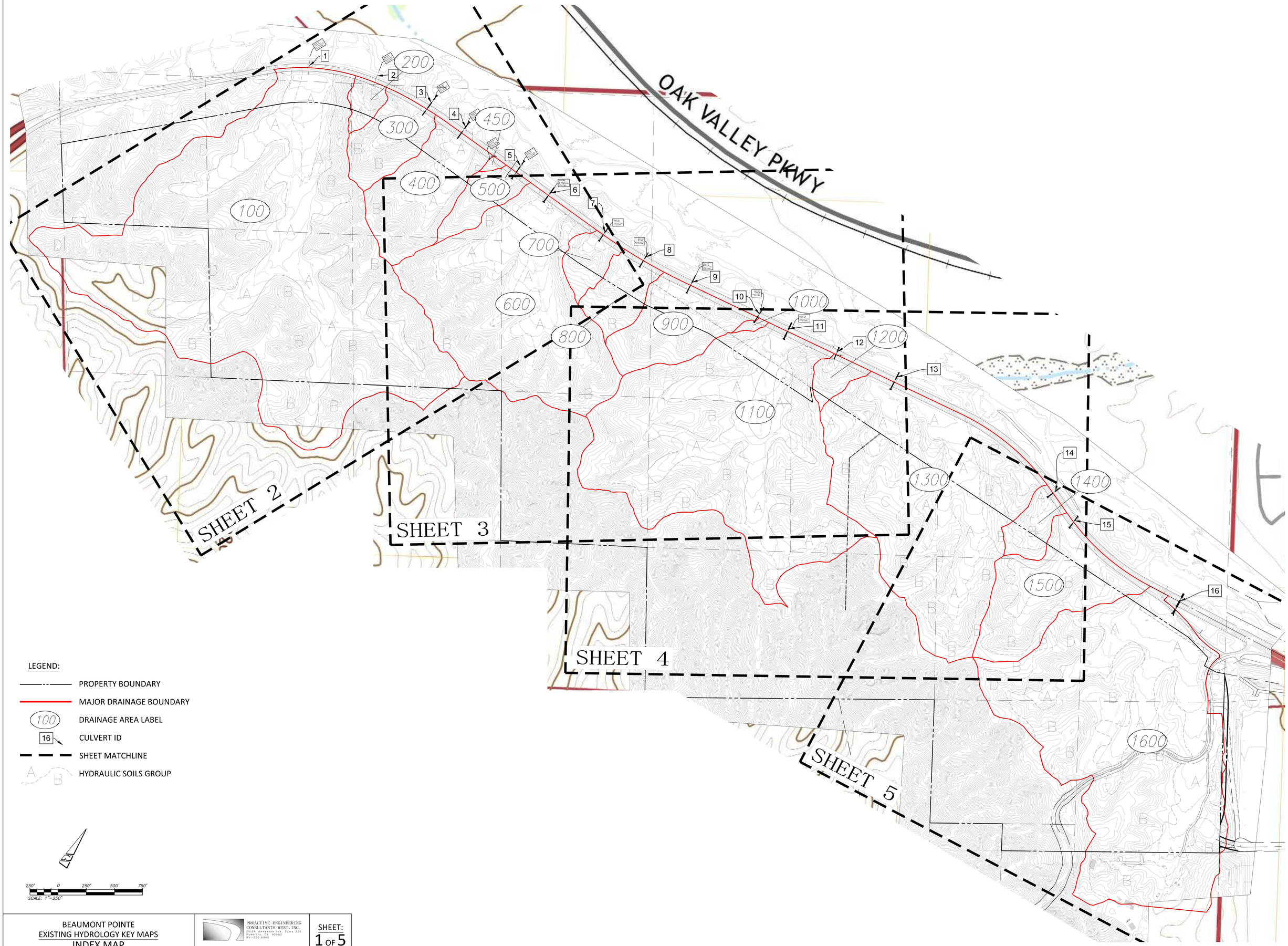

BEAUMONT POINTE
EXISTING HYDROLOGY KEY MAPS
INDEX MAP

PROACTIVE ENGINEERING CONSULTANTS WEST, INC.
25108 JEFFERSON AVE. SUITE 200
MURRIETA, CA 92562
951-200-8842

SHEET:
1 OF 5

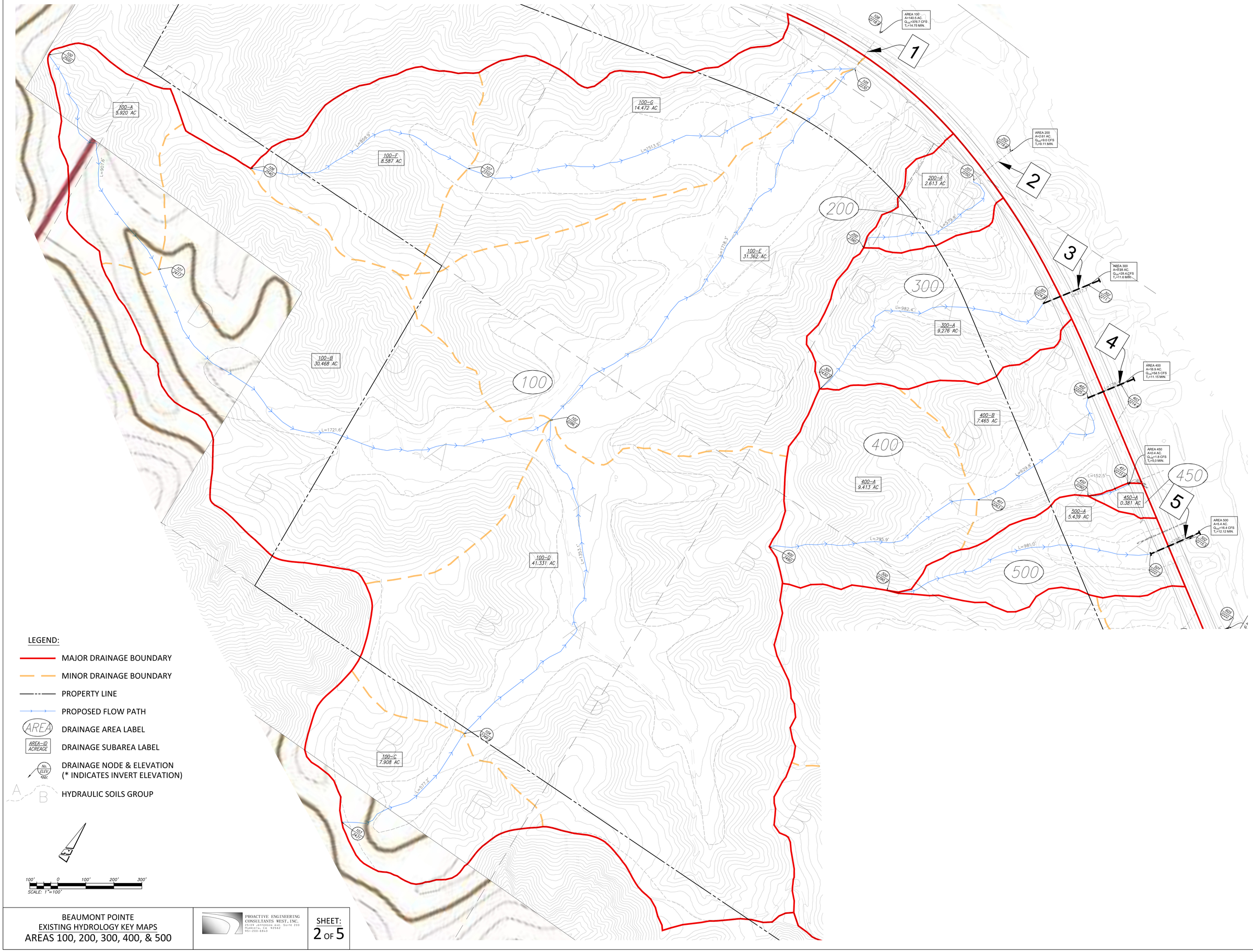

BEAUMONT POINTE
EXISTING HYDROLOGY KEY MAPS
AREAS 100, 200, 300, 400, & 500

PROACTIVE ENGINEERING CONSULTANTS WEST, INC.
25109 JEFFERSON AVE. Suite 200
MURRIETA, CA 92562
951-200-6845

SHEET: 2 OF 5

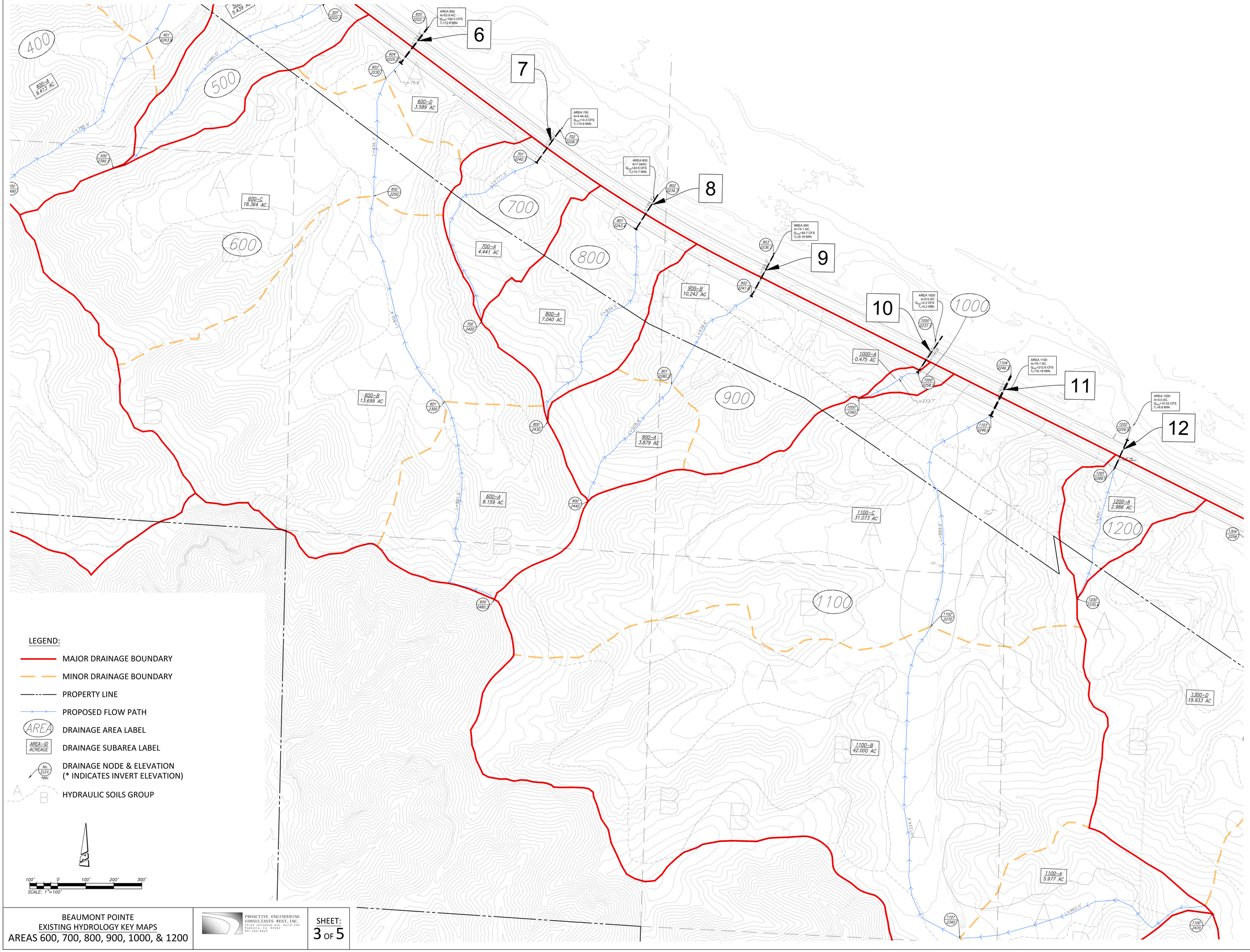

BEAUMONT POINTE
EXISTING HYDROLOGY KEY MAPS
AREAS 600, 700, 800, 900, 1000, & 1200

PROACTIVE ENGINEERING CONSULTANTS WEST, INC.
25108 Jefferson Ave. Suite 200
Murrieta, CA 92562
951-200-8840

SHEET: 3 OF 5

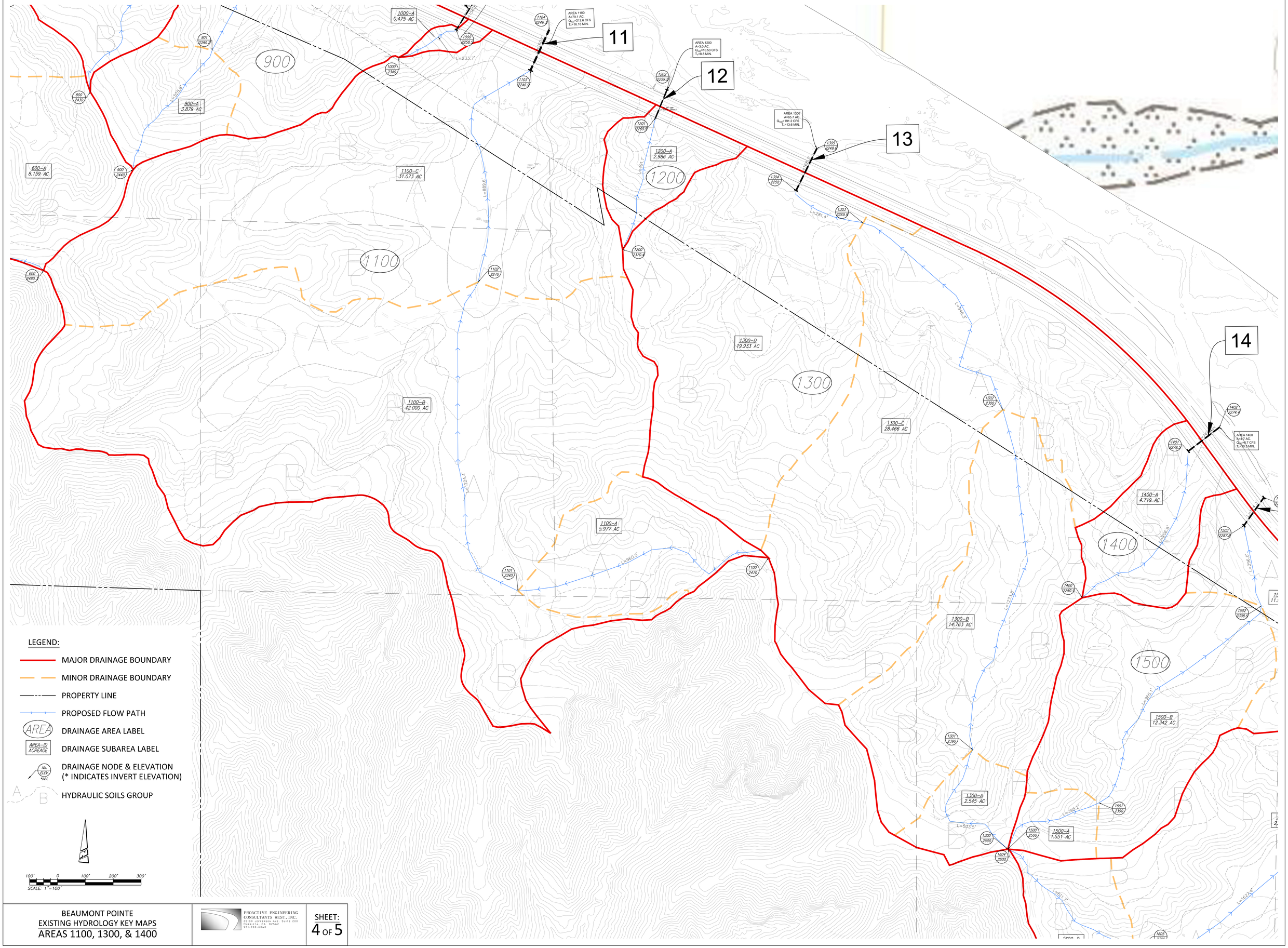

BEAUMONT POINTE
EXISTING HYDROLOGY KEY MAPS
AREAS 1100, 1300, & 1400

PROACTIVE ENGINEERING CONSULTANTS WEST, INC.
25109 JEFFERSON AVE. SUITE 200
MURRIETA, CA 92562
951-200-8840

SHEET: 4 OF 5

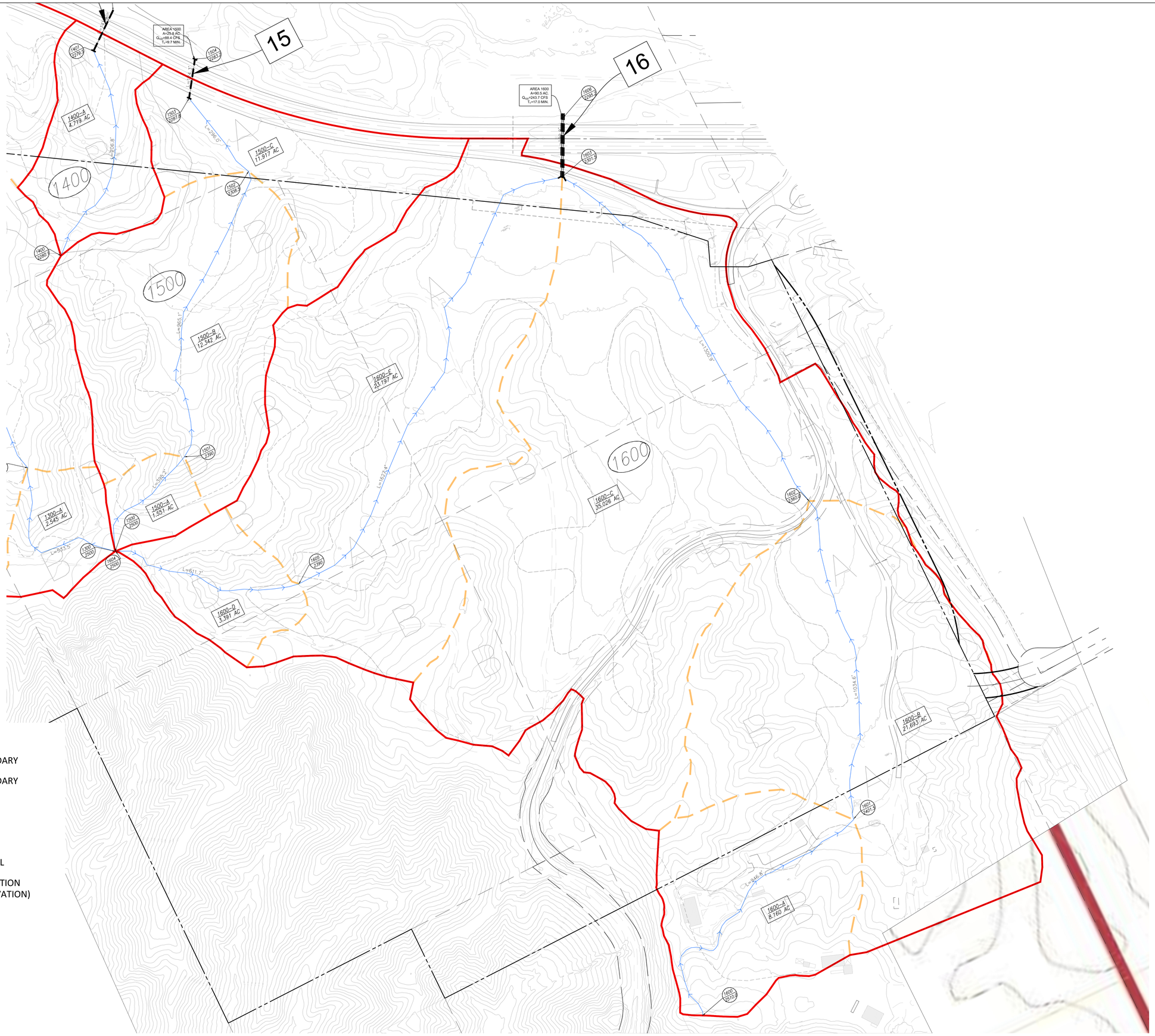

BEAUMONT POINTE
EXISTING HYDROLOGY KEY MAPS
AREAS 1500 & 1600

PROACTIVE ENGINEERING CONSULTANTS WEST, INC.
25108 Jefferson Ave. Suite 200
Murrieta, CA 92562
951-200-8842

SHEET:
5 OF 5

BEAUMONT POINTE
DEVELOPED HYDROLOGY KEY MAPS
INDEX MAP

PROACTIVE ENGINEERING CONSULTANTS WEST, INC.
25105 JEFFERSON AVE. Suite 200
MURRIETA, CA 92562
951-200-6945

SHEET: 1 OF 5

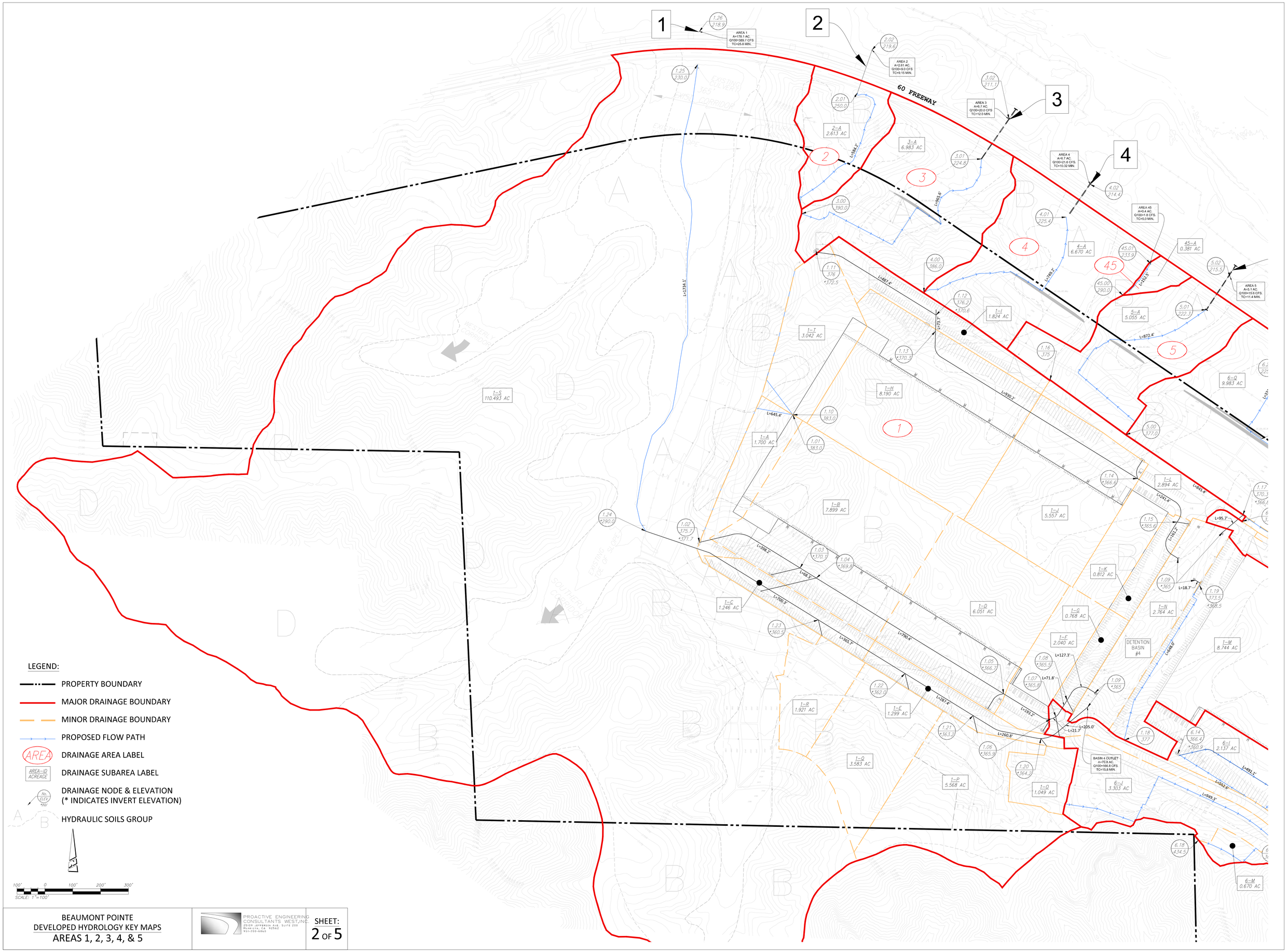

BEAUMONT POINTE
DEVELOPED HYDROLOGY KEY MAPS
AREAS 1, 2, 3, 4, & 5

PROACTIVE ENGINEERING CONSULTANTS WEST, INC.
25109 JEFFERSON AVE. SUITE 200
MURRIETA, CA 92562
951-200-6840

SHEET: 2 OF 5

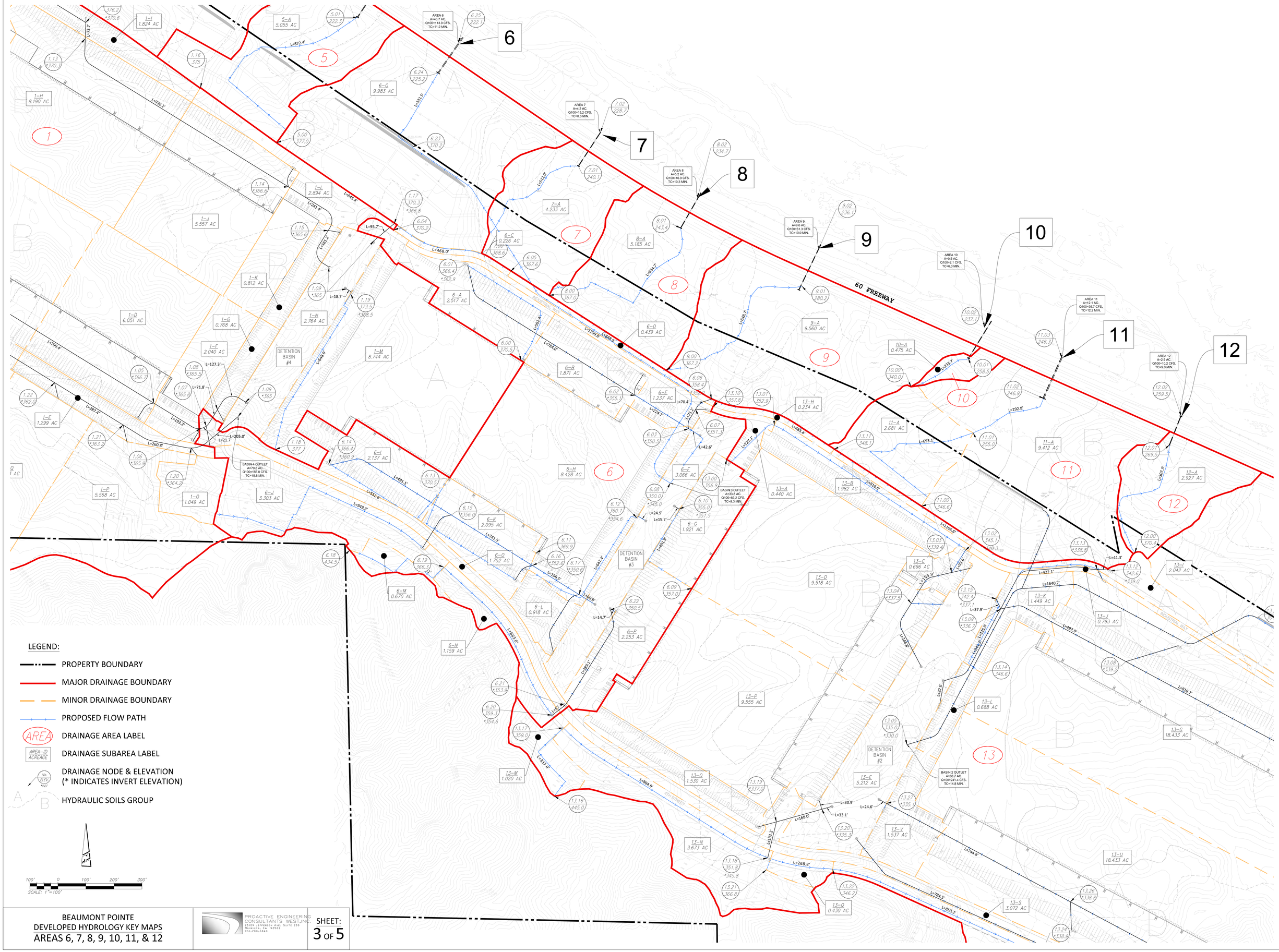

BEAUMONT POINTE
DEVELOPED HYDROLOGY KEY MAPS
AREAS 6, 7, 8, 9, 10, 11, & 12

PROACTIVE ENGINEERING CONSULTANTS WEST, INC.
25109 JEFFERSON AVE. SUITE 200
MURRIETA, CA 92562
951-200-6840

SHEET: 3 OF 5

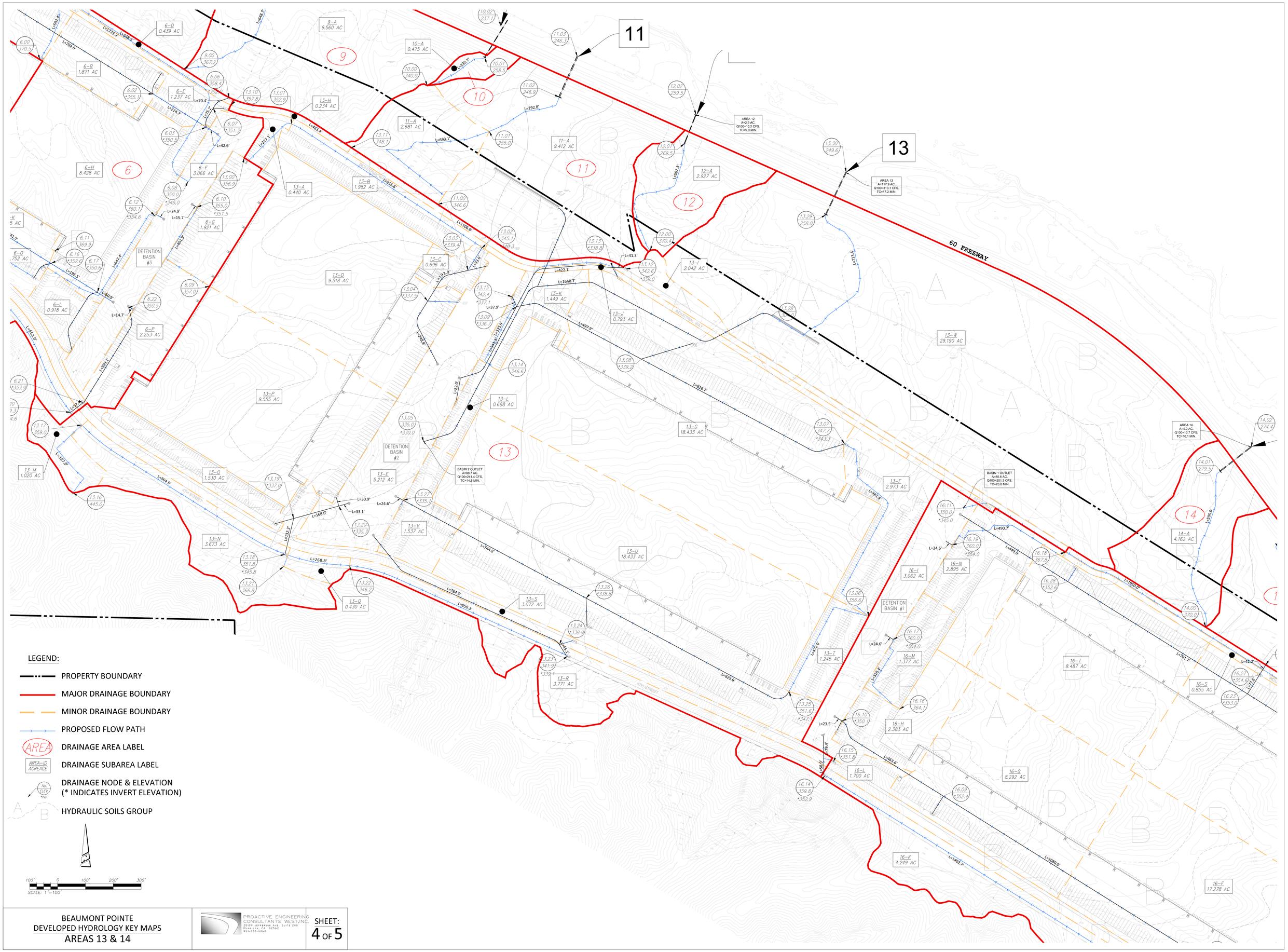

BEAUMONT POINTE
DEVELOPED HYDROLOGY KEY MAPS
AREAS 13 & 14

PROACTIVE ENGINEERING CONSULTANTS WEST, INC.
25109 JEFFERSON AVE. SUITE 209
MURRIETA, CA 92562
951-200-6842

SHEET: 4 OF 5

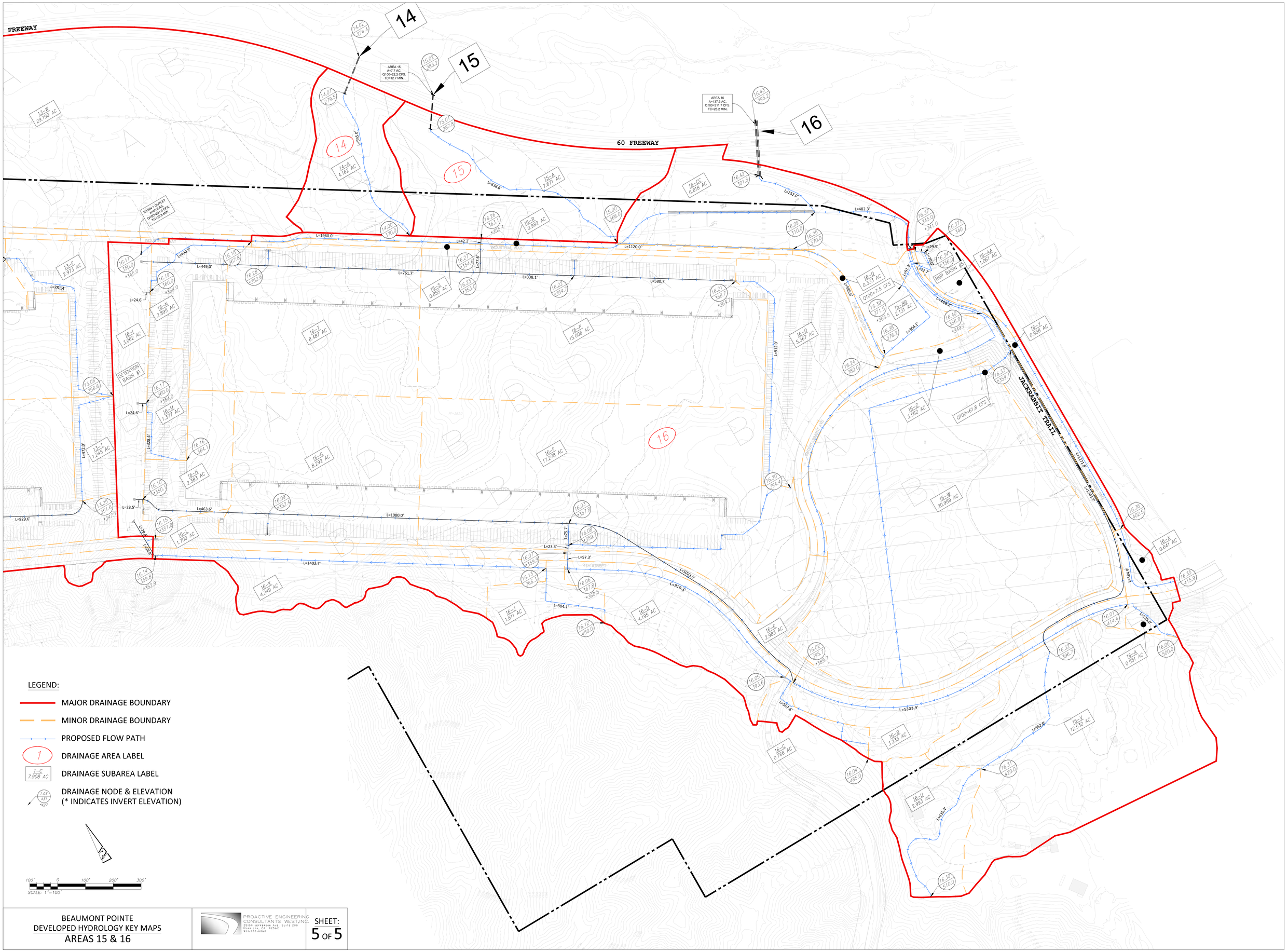

BEAUMONT POINTE
DEVELOPED HYDROLOGY KEY MAPS
AREAS 15 & 16

PROACTIVE ENGINEERING CONSULTANTS WEST, INC.
25109 JEFFERSON AVE. SUITE 200
MURRIETA, CA 92562
951-200-6845

SHEET: 5 OF 5

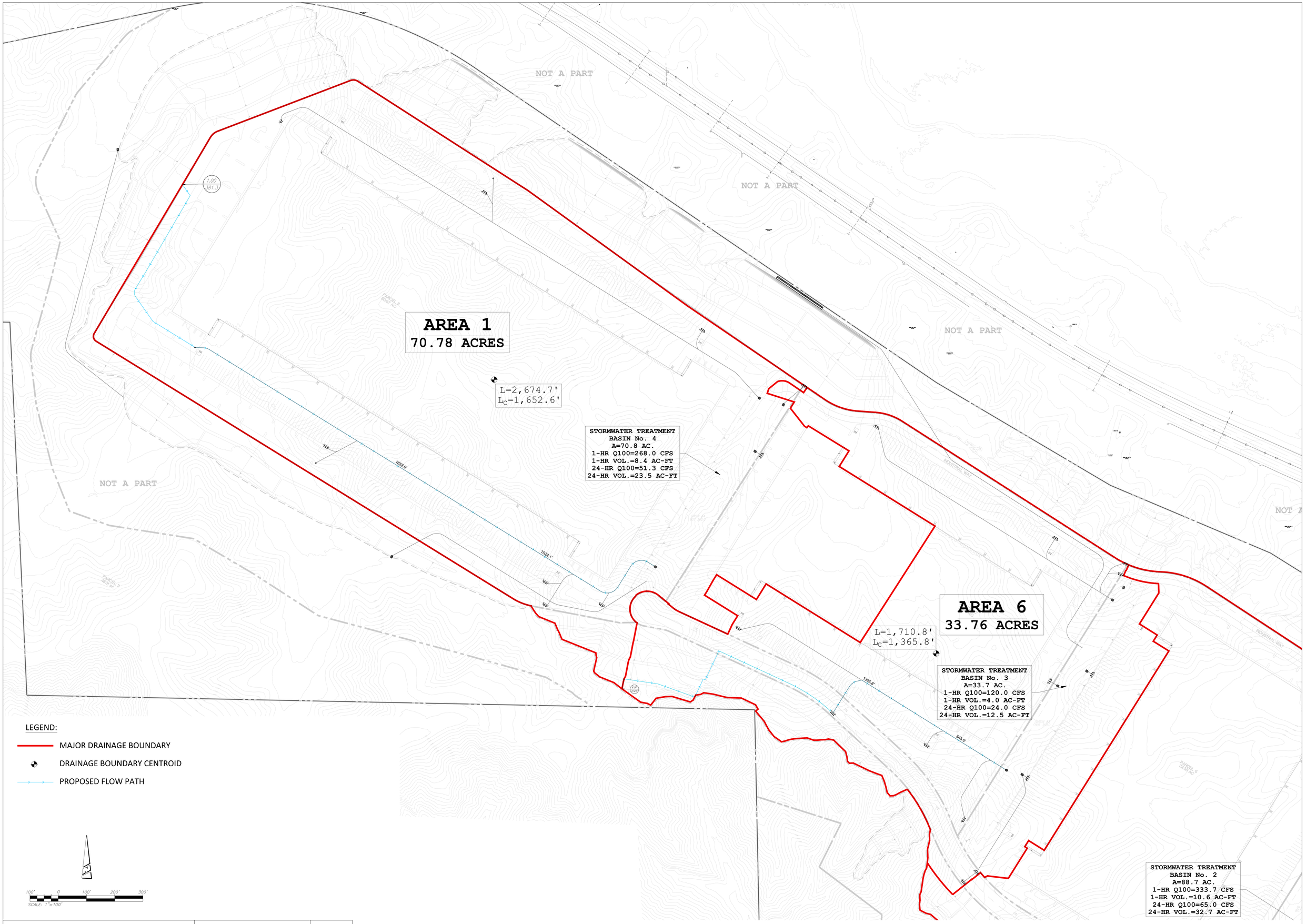

BEAUMONT POINTE
DEVELOPED UNIT HYDROGRAPH KEY MAPS
AREAS 1 & 6

PROACTIVE ENGINEERING CONSULTANTS WEST, INC.
25109 Jefferson Ave. Suite 200
Murrieta, CA 92562
951-200-6840

PROACTIVE ENGINEERING WEST

SHEET: 1 OF 3

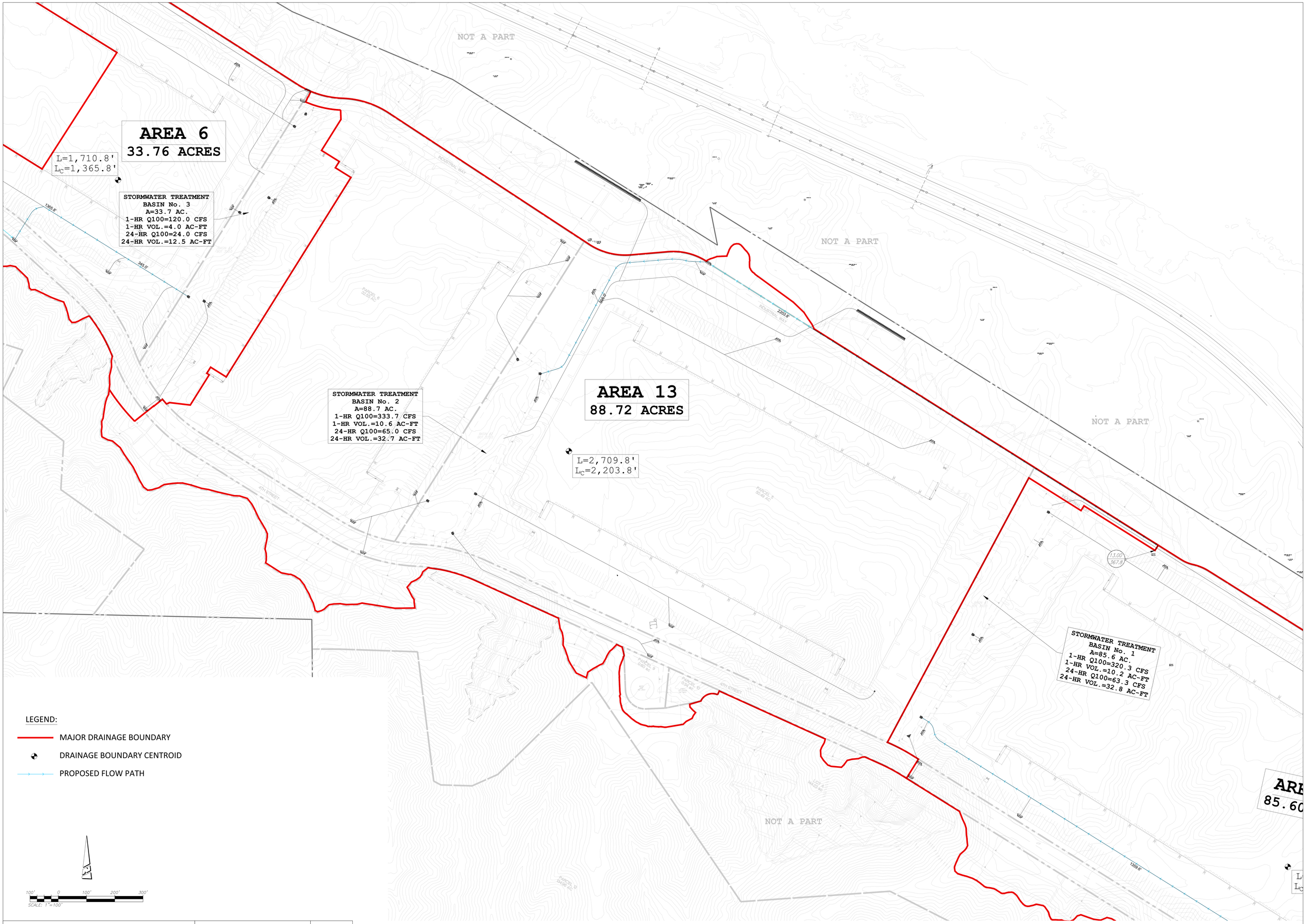

BEAUMONT POINTE
DEVELOPED UNIT HYDROGRAPH KEY MAPS
AREA 13

PROACTIVE ENGINEERING CONSULTANTS WEST, INC.
25109 JEFFERSON AVE. Suite 200
Murrieta, CA 92562
951-200-8842

PROACTIVE ENGINEERING WEST

SHEET: 2 OF 3

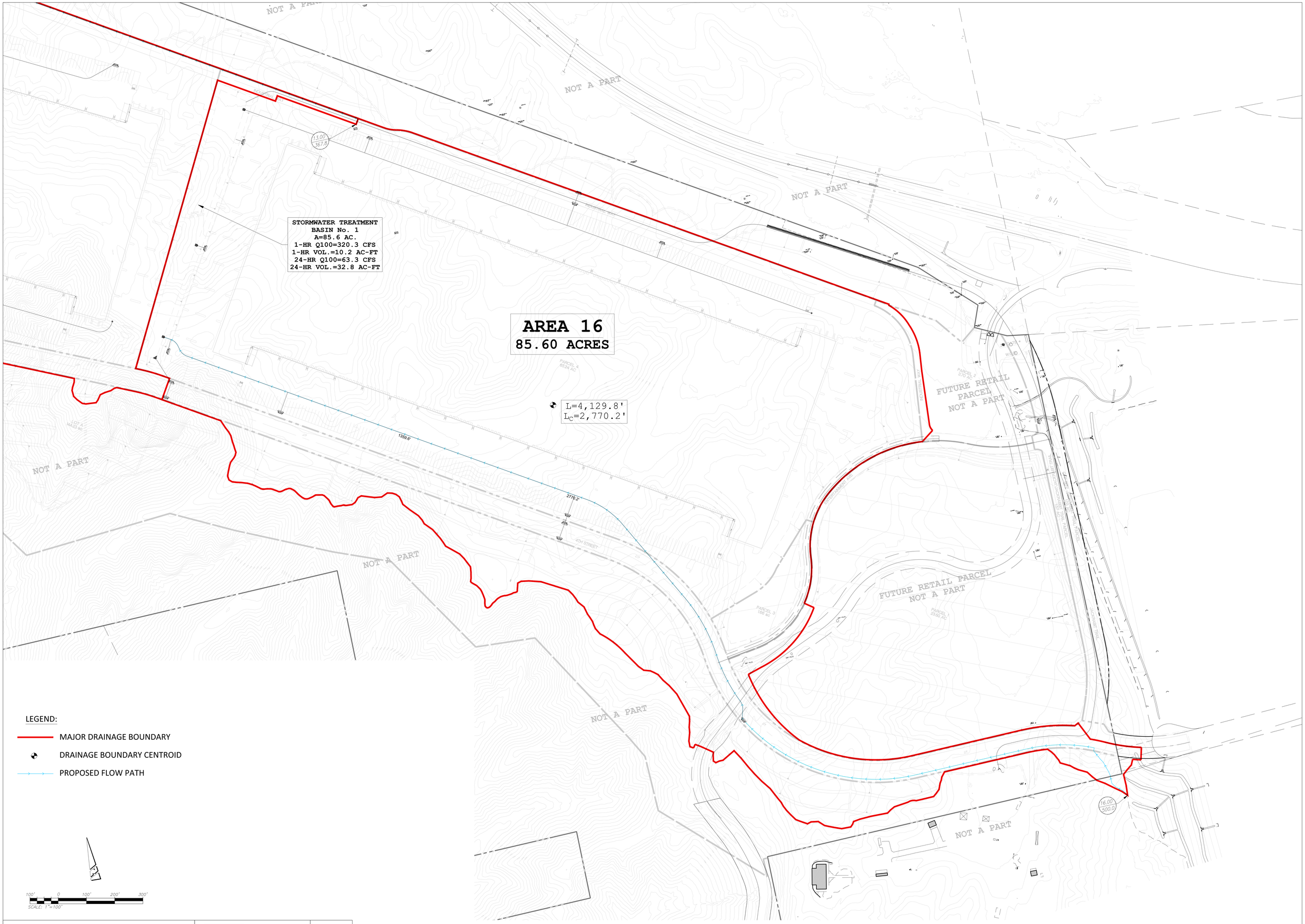

LEGEND:

- MAJOR DRAINAGE BOUNDARY
- DRAINAGE BOUNDARY CENTROID
- PROPOSED FLOW PATH

100' 0 100' 200' 300'
SCALE: 1"=100'

BEAUMONT POINTE
DEVELOPED UNIT HYDROGRAPH KEY MAPS
AREA 16

PROACTIVE ENGINEERING CONSULTANTS WEST, INC.
25109 JEFFERSON AVE. SUITE 200
MURRIETA, CA 92562
951-200-8842

PROACTIVE ENGINEERING WEST

SHEET: 3 OF 3

References ..... **H**

Dist	COUNTY	ROUTE	POST MILES TOTAL PROJECT	SHEET No.	TOTAL SHEETS
08	Riv	60	22.1/26.6	122	680

REGISTERED CIVIL ENGINEER 8-1-18 DATE

8-15-18
PLANS APPROVAL DATE

REGISTERED PROFESSIONAL ENGINEER
AHMAD SHAH
No. C55259
Exp. 9-30-18
CIVIL
STATE OF CALIFORNIA

THE STATE OF CALIFORNIA OR ITS OFFICERS OR AGENTS SHALL NOT BE RESPONSIBLE FOR THE ACCURACY OR COMPLETENESS OF SCANNED COPIES OF THIS PLAN SHEET.

NOTE:

FOR ACCURATE RIGHT OF WAY DATA, CONTACT RIGHT OF WAY ENGINEERING AT THE DISTRICT OFFICE.

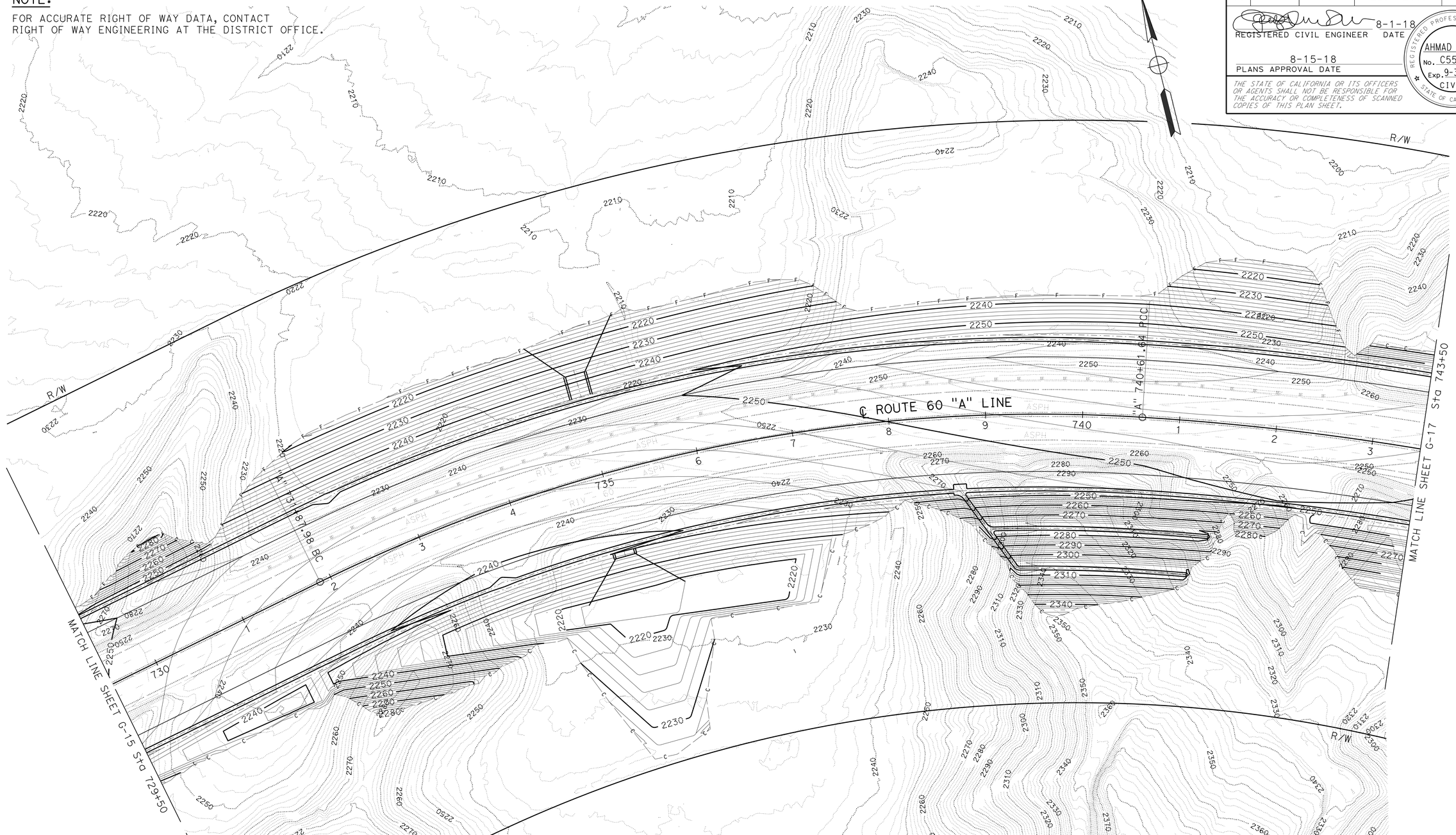

CONTOUR GRADING

SCALE: 1"=50'

G-16

APPROVED FOR CONTOUR GRADING WORK ONLY

STATE OF CALIFORNIA - DEPARTMENT OF TRANSPORTATION
Caltrans
DESIGN

FUNCTIONAL SUPERVISOR: LARRY SARTORI
CALCULATED-DESIGNED BY: HA VU
CHECKED BY: AHMAD SHAH
REVISED BY
DATE REVISED

LAST REVISION 08-01-18
DATE PLOTTED => 05-SEP-2018
TIME PLOTTED => 16:46

Dist	COUNTY	ROUTE	POST MILES TOTAL PROJECT	SHEET No.	TOTAL SHEETS
08	Riv	60	22.1/26.6	123	680

REGISTERED CIVIL ENGINEER 8-1-18 DATE

8-15-18
PLANS APPROVAL DATE

REGISTERED PROFESSIONAL ENGINEER
AHMAD SHAH
No. C55259
Exp. 9-30-18
CIVIL
STATE OF CALIFORNIA

THE STATE OF CALIFORNIA OR ITS OFFICERS OR AGENTS SHALL NOT BE RESPONSIBLE FOR THE ACCURACY OR COMPLETENESS OF SCANNED COPIES OF THIS PLAN SHEET.

NOTE:
FOR ACCURATE RIGHT OF WAY DATA, CONTACT RIGHT OF WAY ENGINEERING AT THE DISTRICT OFFICE.

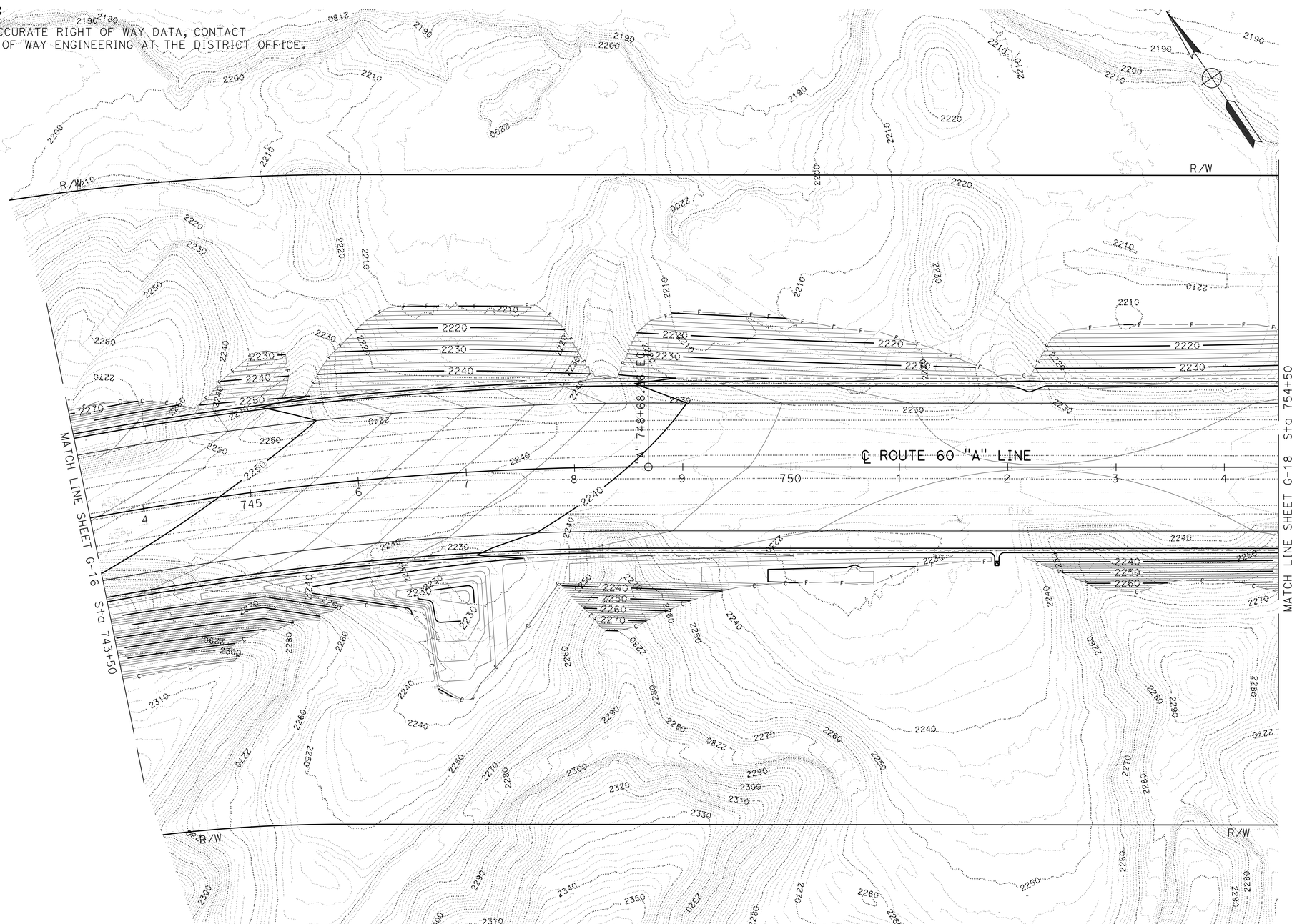

CONTOUR GRADING

SCALE: 1"=50'

G-17

APPROVED FOR CONTOUR GRADING WORK ONLY

STATE OF CALIFORNIA - DEPARTMENT OF TRANSPORTATION
Caltrans
DESIGN

FUNCTIONAL SUPERVISOR: LARRY SARTORI
CALCULATED-DESIGNED BY: HA VU
CHECKED BY: AHMAD SHAH
REVISED BY
DATE REVISED

LAST REVISION 08-01-18
DATE PLOTTED => 05-SEP-2018
TIME PLOTTED => 16:46

BORDER LAST REVISED 7/2/2010
USERNAME => s102458
DGN FILE => 0812000307hd017.dgn
RELATIVE BORDER SCALE IS IN INCHES 0 1 2 3
UNIT 2231
PROJECT NUMBER & PHASE 08120003071

Dist	COUNTY	ROUTE	POST MILES TOTAL PROJECT	SHEET No.	TOTAL SHEETS
08	Riv	60	22.1/26.6	124	680

REGISTERED CIVIL ENGINEER 8-1-18 DATE

8-15-18
PLANS APPROVAL DATE

REGISTERED PROFESSIONAL ENGINEER
AHMAD SHAH
No. C55259
Exp. 9-30-18
CIVIL
STATE OF CALIFORNIA

THE STATE OF CALIFORNIA OR ITS OFFICERS OR AGENTS SHALL NOT BE RESPONSIBLE FOR THE ACCURACY OR COMPLETENESS OF SCANNED COPIES OF THIS PLAN SHEET.

NOTE:

FOR ACCURATE RIGHT OF WAY DATA, CONTACT RIGHT OF WAY ENGINEERING AT THE DISTRICT OFFICE.

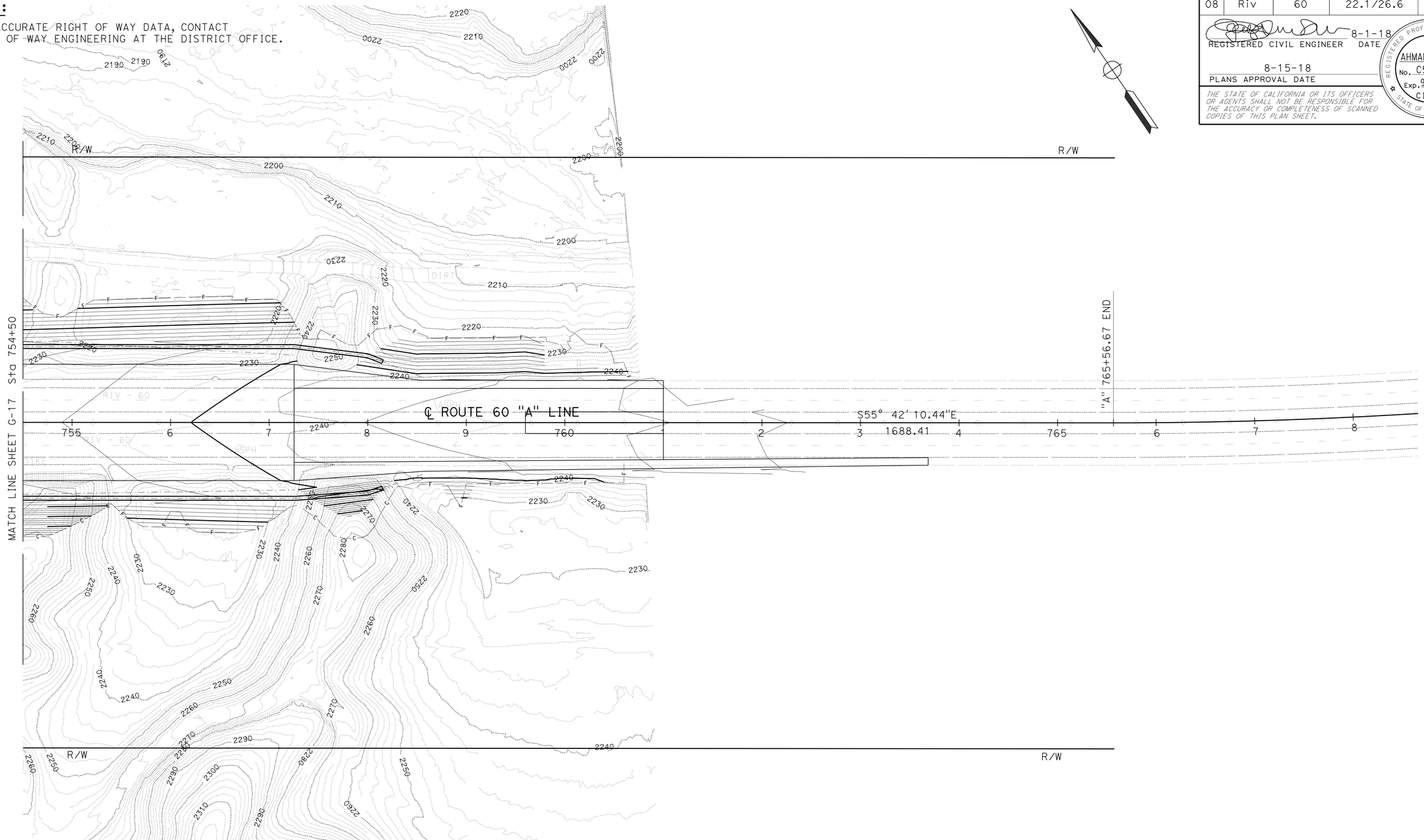

APPROVED FOR CONTOUR GRADING WORK ONLY

CONTOUR GRADING

SCALE: 1"=50'

G-18

STATE OF CALIFORNIA - DEPARTMENT OF TRANSPORTATION

Caltrans

DESIGN

FUNCTIONAL SUPERVISOR: LARRY SARTORI

CALCULATED-DESIGNED BY: AHMAD SHAH

CHECKED BY: HA VU

REVISED BY

DATE REVISED

LAST REVISION 08-01-18 | DATE PLOTTED => 05-SEP-2018 | TIME PLOTTED => 16:46

Dist	COUNTY	ROUTE	POST MILES TOTAL PROJECT	SHEET No.	TOTAL SHEETS
08	Riv	60	22.1/26.6	140	680

REGISTERED CIVIL ENGINEER 8-1-18 DATE

8-15-18
PLANS APPROVAL DATE

REGISTERED PROFESSIONAL ENGINEER HA VU No. C61359 Exp. 9-30-19 CIVIL STATE OF CALIFORNIA

THE STATE OF CALIFORNIA OR ITS OFFICERS OR AGENTS SHALL NOT BE RESPONSIBLE FOR THE ACCURACY OR COMPLETENESS OF SCANNED COPIES OF THIS PLAN SHEET.

NOTES:

1. FOR ACCURATE RIGHT OF WAY DATA, CONTACT RIGHT OF WAY ENGINEERING AT THE DISTRICT OFFICE.
2. * SEE DRAINAGE DETAILS SHEETS.

CURVE DATA

No. ⓡ	R	Δ	T	L
12	1683.00′	02°41′31"	39.54′	79.07′
13	1683.00′	02°14′55"	33.03′	66.05′

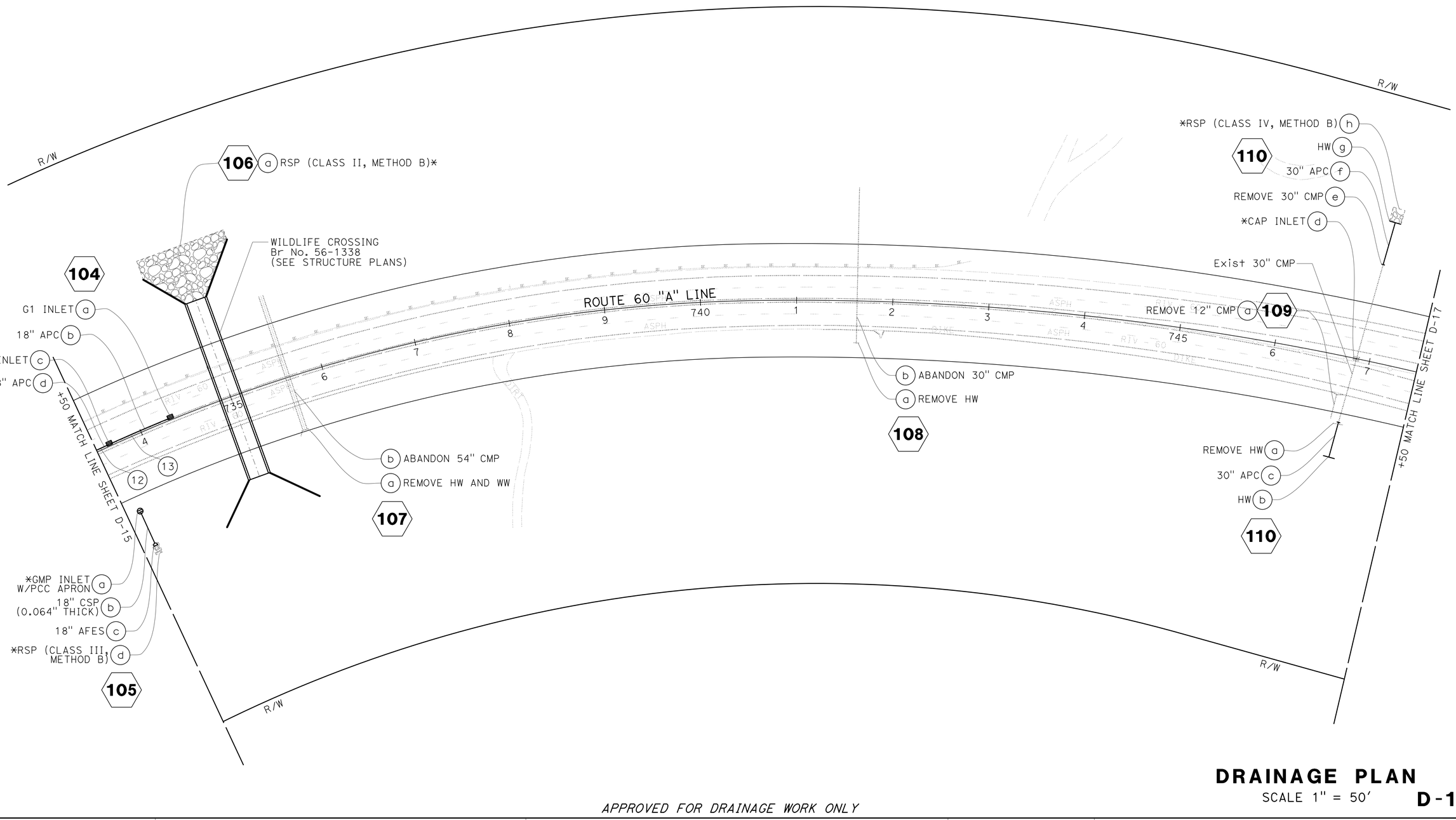

DRAINAGE PLAN

SCALE 1" = 50′ **D-16**

APPROVED FOR DRAINAGE WORK ONLY

STATE OF CALIFORNIA - DEPARTMENT OF TRANSPORTATION
Caltrans
DESIGN

FUNCTIONAL SUPERVISOR: LARRY SARTORI
CALCULATED-DESIGNED BY: HA VU
CHECKED BY: AHMAD SHAH
REVISED BY
DATE REVISED

LAST REVISION 08-01-18 | DATE PLOTTED => 05-SEP-2018 | TIME PLOTTED => 16:47

Dist	COUNTY	ROUTE	POST MILES TOTAL PROJECT	SHEET No.	TOTAL SHEETS
08	Riv	60	22.1/26.6	141	680

REGISTERED CIVIL ENGINEER 8-1-18 DATE

8-15-18
PLANS APPROVAL DATE

REGISTERED PROFESSIONAL ENGINEER HA VU No. C61359 Exp. 9-30-19 CIVIL STATE OF CALIFORNIA

THE STATE OF CALIFORNIA OR ITS OFFICERS OR AGENTS SHALL NOT BE RESPONSIBLE FOR THE ACCURACY OR COMPLETENESS OF SCANNED COPIES OF THIS PLAN SHEET.

NOTES:

1. FOR ACCURATE RIGHT OF WAY DATA, CONTACT RIGHT OF WAY ENGINEERING AT THE DISTRICT OFFICE.
2. * SEE DRAINAGE DETAILS SHEETS.

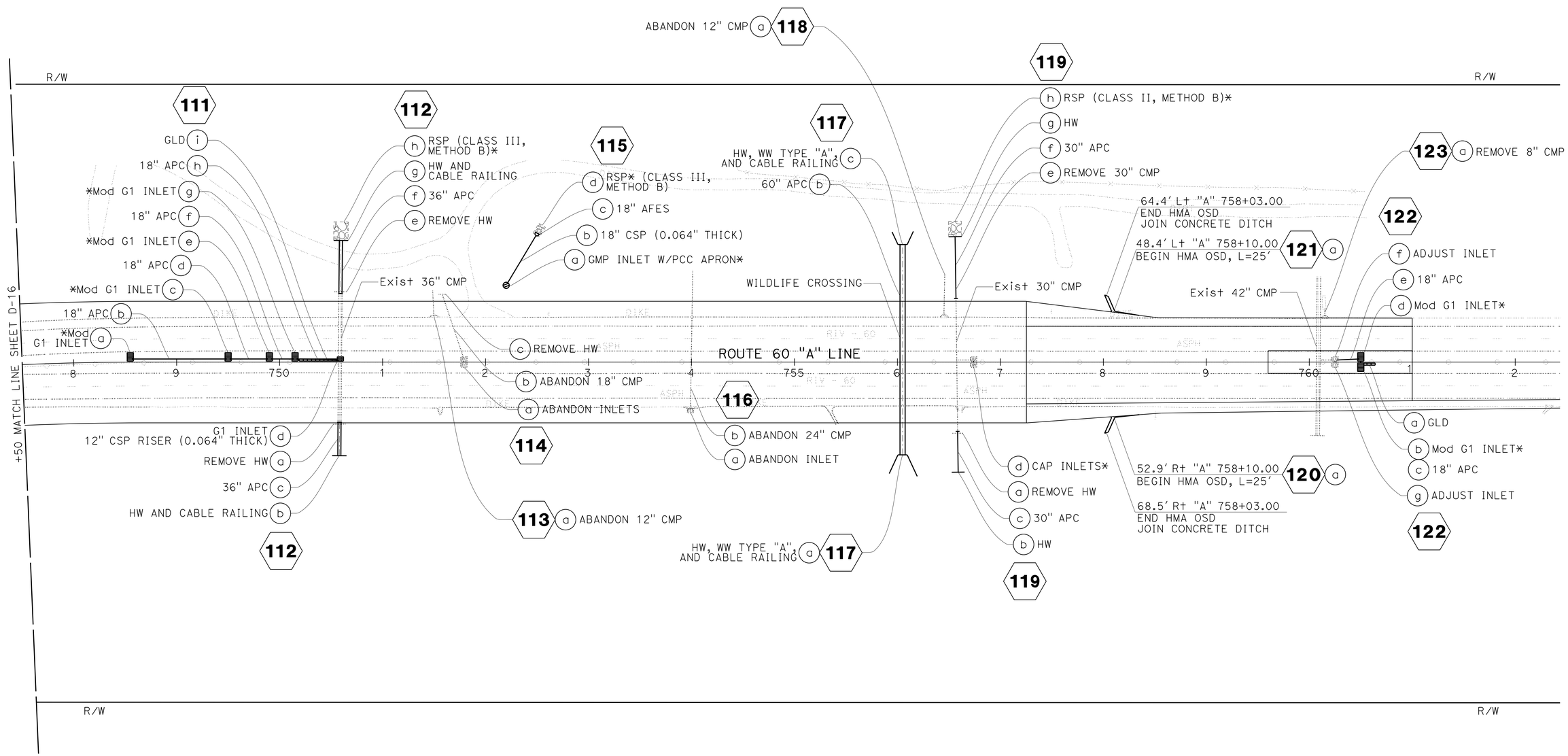

DRAINAGE PLAN

SCALE 1" = 50'

D-17

APPROVED FOR DRAINAGE WORK ONLY

STATE OF CALIFORNIA - DEPARTMENT OF TRANSPORTATION

Caltrans® **DESIGN**

FUNCTIONAL SUPERVISOR: LARRY SARTORI

CALCULATED-DESIGNED BY: HA VU

CHECKED BY: AHMAD SHAH

REVISED BY

DATE REVISED

LAST REVISION 08-01-18

DATE PLOTTED => 05-SEP-2018

TIME PLOTTED => 16:47

BORDER LAST REVISED 7/2/2010

USERNAME => s102458

DGN FILE => 0812000307ia017.dgn

RELATIVE BORDER SCALE IS IN INCHES 0 1 2 3

UNIT 2231

PROJECT NUMBER & PHASE 08120003071

DIST	COUNTY	ROUTE	POST MILES TOTAL PROJECT	SHEET No.	TOTAL SHEETS
08	Riv	60	22.1/26.6	612	680

REGISTERED CIVIL ENGINEER — DATE 06/26/18

8-15-18
PLANS APPROVAL DATE

REGISTERED PROFESSIONAL ENGINEER — CESAR SANCHEZ — No. C79196 — Exp. 3-31-20 — CIVIL — STATE OF CALIFORNIA

THE STATE OF CALIFORNIA OR ITS OFFICERS OR AGENTS SHALL NOT BE RESPONSIBLE FOR THE ACCURACY OR COMPLETENESS OF SCANNED COPIES OF THIS PLAN SHEET.

QUANTITIES

STRUCTURAL CONCRETE, BOX CULVERT	2,282	CY
BAR REINFORCING STEEL (BOX CULVERT)	544,140	LB
CABLE RAILING	292	LF

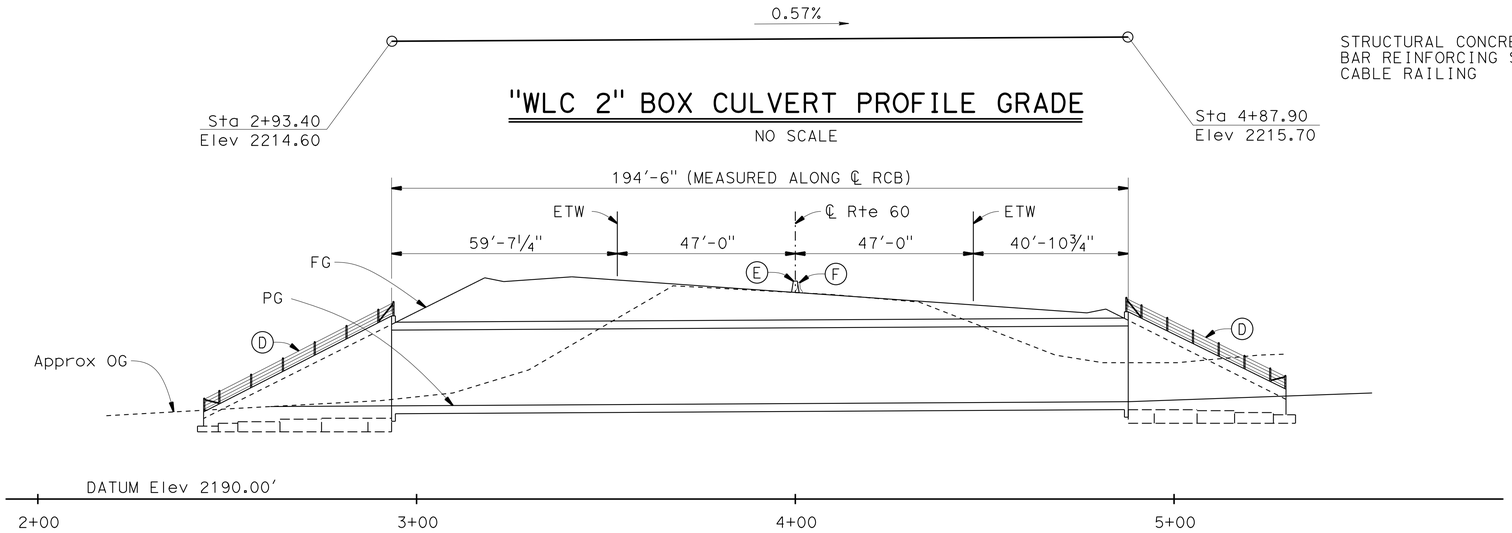

"WLC 2" BOX CULVERT PROFILE GRADE

NO SCALE

LONGITUDINAL SECTION

1" = 20'

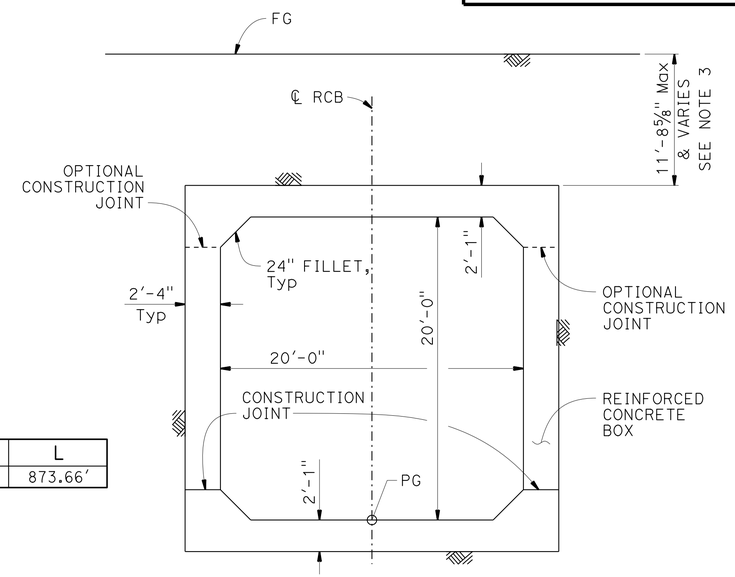

TYPICAL SECTION

1" = 5'

CURVE DATA

No.	R	Δ	T	L
1	1680.94'	29°46'45"	446.94'	873.66'

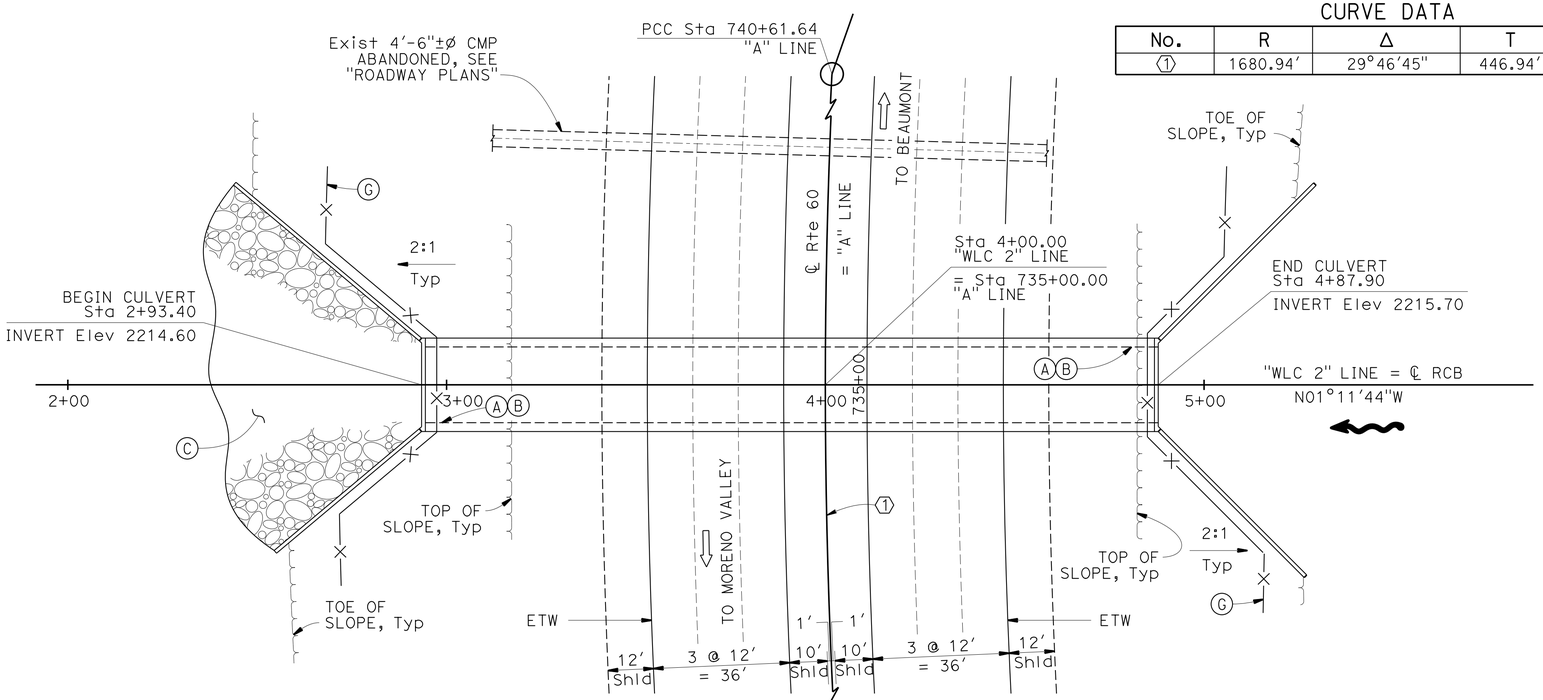

PLAN

1" = 20'

NOTE:
THE CONTRACTOR MUST VERIFY ALL CONTROLLING FIELD DIMENSIONS BEFORE ORDERING OR FABRICATING ANY MATERIAL.

NOTES:

(A) Paint "WILDLIFE CULVERT".

(B) Paint "Br. No. 56-1338".

(C) Rock Slope Protection, see "ROADWAY PLANS".

(D) Cable Railing

(E) New Concrete Barrier Type 60, see "ROADWAY PLANS".

(F) Existing Concrete Barrier Type 50, to be removed, see "ROADWAY PLANS".

(G) New Wildlife Fence, see "ROADWAY PLANS.

1. For "GENERAL NOTES", "INDEX TO PLANS", and "STANDARD PLANS", see "INDEX TO PLANS" sheet.

2. For construction staging, see "STAGE CONSTRUCTION NO. 1" and "STAGE CONSTRUCTION NO. 2" sheets.

3. Soil cover at edge of traveled way is 3 feet minimum.

LEGEND:

New Construction

Direction of Traffic

Direction of Flow

PREM RIMAL
DESIGN ENGINEER

	BY	CHECKED
DESIGN	C.J. Wu / L. Guptill	B. Patel
DETAILS	P. Perez / H. Iniguez	B. Patel
QUANTITIES	L. Guptill	B. Patel

LOAD & RESISTANCE FACTOR DESIGN — LIVE LOADING: HL93 W/"LOW-BOY": PERMIT DESIGN VEHICLE

	BY	CHECKED
LAYOUT	L. Guptill	B. Patel
SPECIFICATIONS	J. Jiang	PLANS AND SPECS COMPARED J. Jiang

ORIGINAL SCALE IN INCHES FOR REDUCED PLANS 0 1 2 3

STATE OF CALIFORNIA
DEPARTMENT OF TRANSPORTATION

DIVISION OF ENGINEERING SERVICES
STRUCTURE DESIGN
DESIGN BRANCH 21

BRIDGE NO. 56-1338
POST MILE 26.08

WILDLIFE CULVERT AT STA 735+00
GENERAL PLAN

UNIT: 3623
PROJECT NUMBER & PHASE: 0812000307-1
CONTRACT NO.: 08-0N69U4

DISREGARD PRINTS BEARING EARLIER REVISION DATES

REVISION DATES: 06/13/16 02/23/17 10/12/17

SHEET 1 OF 11

USERNAME => s102458 DATE PLOTTED => 06-SEP-2018 TIME PLOTTED => 06:40

STRUCTURES DESIGN GENERAL PLAN SHEET (ENGLISH) (REV.09-01-10)

FILE => 56-1338-a-gp.dgn

Dist	COUNTY	ROUTE	POST MILES TOTAL PROJECT	SHEET No.	TOTAL SHEETS
08	Riv	60	22.1/26.6	190	680

REGISTERED CIVIL ENGINEER 8-1-18 DATE

8-15-18
PLANS APPROVAL DATE

REGISTERED PROFESSIONAL ENGINEER HA VU No. C61359 Exp. 9-30-19 CIVIL STATE OF CALIFORNIA

THE STATE OF CALIFORNIA OR ITS OFFICERS OR AGENTS SHALL NOT BE RESPONSIBLE FOR THE ACCURACY OR COMPLETENESS OF SCANNED COPIES OF THIS PLAN SHEET.

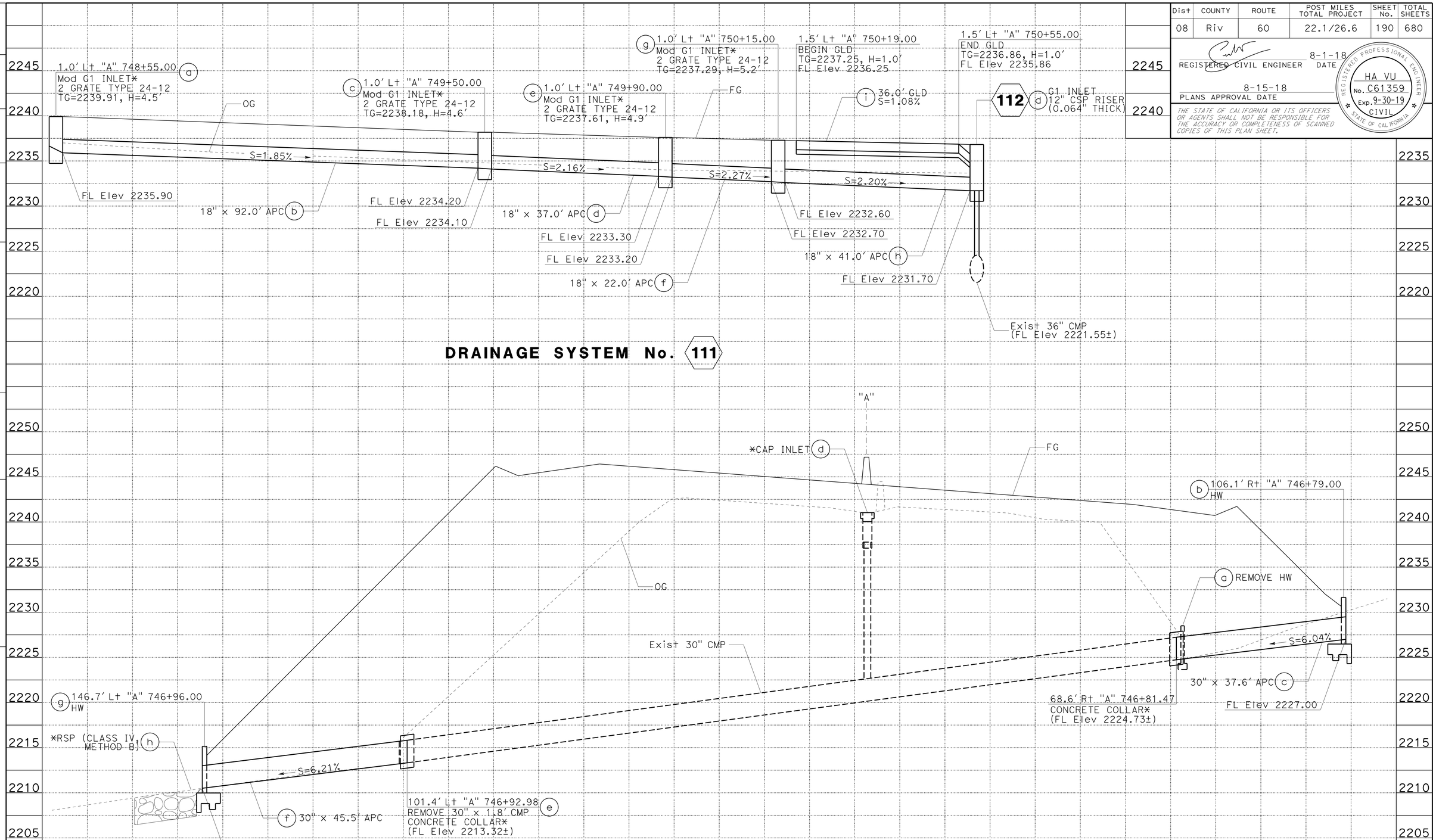

DRAINAGE PROFILES

SCALE: Horiz 1" = 10'
Vert 1" = 5'

DP-49

* SEE DRAINAGE DETAILS SHEETS.
** SEE CONSTRUCTION DETAILS SHEETS.

STATION		TOTAL
CY	Exc	
	Emb	

STATE OF CALIFORNIA - DEPARTMENT OF TRANSPORTATION
Caltrans DESIGN

FUNCTIONAL SUPERVISOR: LARRY SARTORI

CALCULATED-DESIGNED BY: HA VU
CHECKED BY: AHMAD SHAH

REVISED BY / DATE REVISED

LAST REVISION 08-01-18
DATE PLOTTED => 05-SEP-2018
TIME PLOTTED => 16:48

Dist	COUNTY	ROUTE	POST MILES TOTAL PROJECT	SHEET No.	TOTAL SHEETS
08	Riv	60	22.1/26.6	191	680

REGISTERED CIVIL ENGINEER 8-1-18 DATE

8-15-18
PLANS APPROVAL DATE

REGISTERED PROFESSIONAL ENGINEER HA VU No. C61359 Exp. 9-30-19 CIVIL STATE OF CALIFORNIA

THE STATE OF CALIFORNIA OR ITS OFFICERS OR AGENTS SHALL NOT BE RESPONSIBLE FOR THE ACCURACY OR COMPLETENESS OF SCANNED COPIES OF THIS PLAN SHEET.

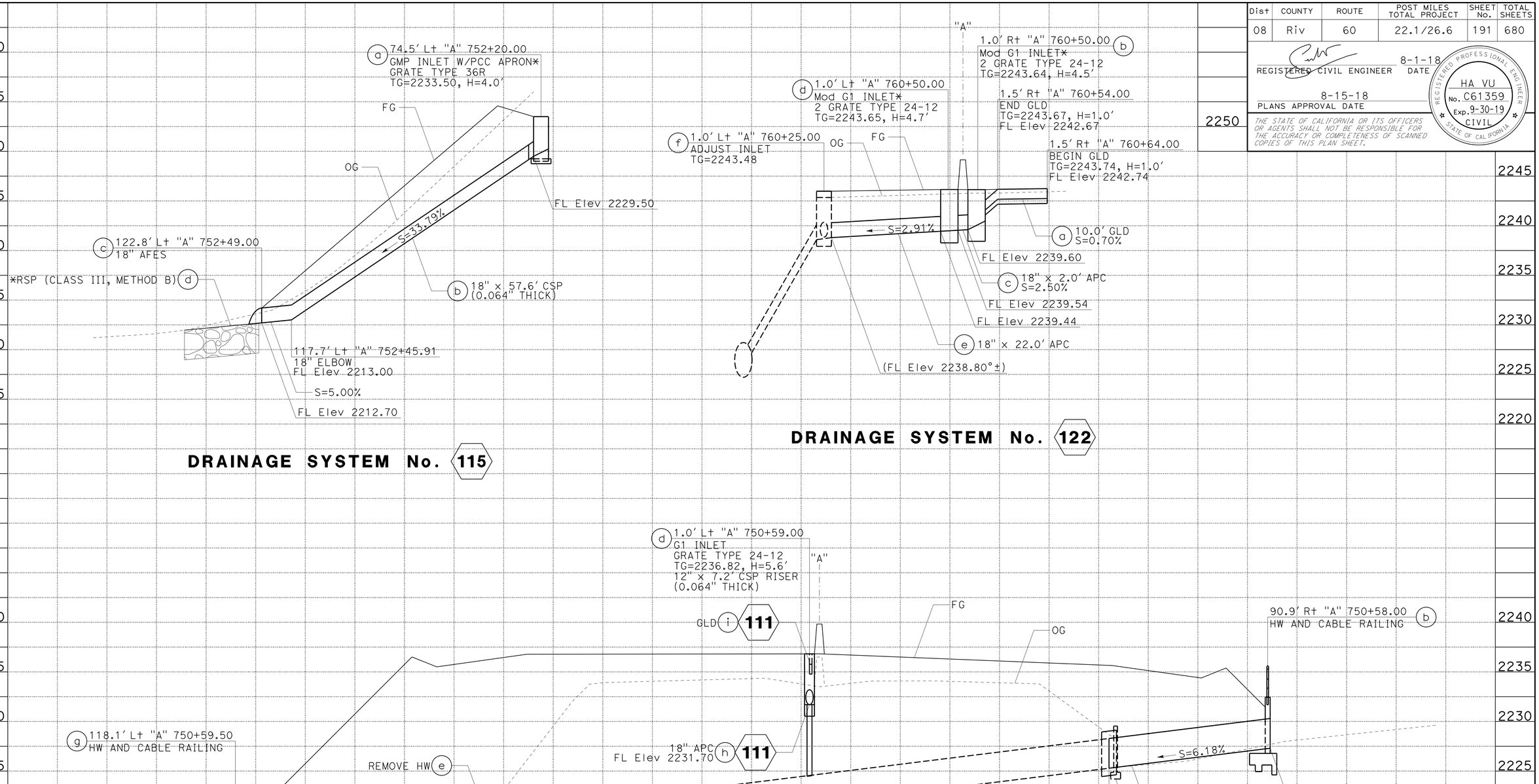

* SEE DRAINAGE DETAILS SHEETS.
** SEE CONSTRUCTION DETAILS SHEETS.

DRAINAGE PROFILES

SCALE: Horiz 1" = 10'
Vert 1" = 5'

DP-50

STATION			TOTAL
CY	Exc		
	Emb		

REVISED BY | DATE REVISED
HA VU | AHMAD SHAH
CALCULATED-DESIGNED BY | CHECKED BY
FUNCTIONAL SUPERVISOR | LARRY SARTORI
STATE OF CALIFORNIA - DEPARTMENT OF TRANSPORTATION
Caltrans
DESIGN

LAST REVISION 08-01-18 | DATE PLOTTED => 05-SEP-2018 | TIME PLOTTED => 16:48

Dist	COUNTY	ROUTE	POST MILES TOTAL PROJECT	SHEET No.	TOTAL SHEETS
08	Riv	60	22.1/26.6	192	680

REGISTERED CIVIL ENGINEER 8-1-18 DATE

8-15-18
PLANS APPROVAL DATE

REGISTERED PROFESSIONAL ENGINEER HA VU No. C61359 Exp. 9-30-19 CIVIL STATE OF CALIFORNIA

THE STATE OF CALIFORNIA OR ITS OFFICERS OR AGENTS SHALL NOT BE RESPONSIBLE FOR THE ACCURACY OR COMPLETENESS OF SCANNED COPIES OF THIS PLAN SHEET.

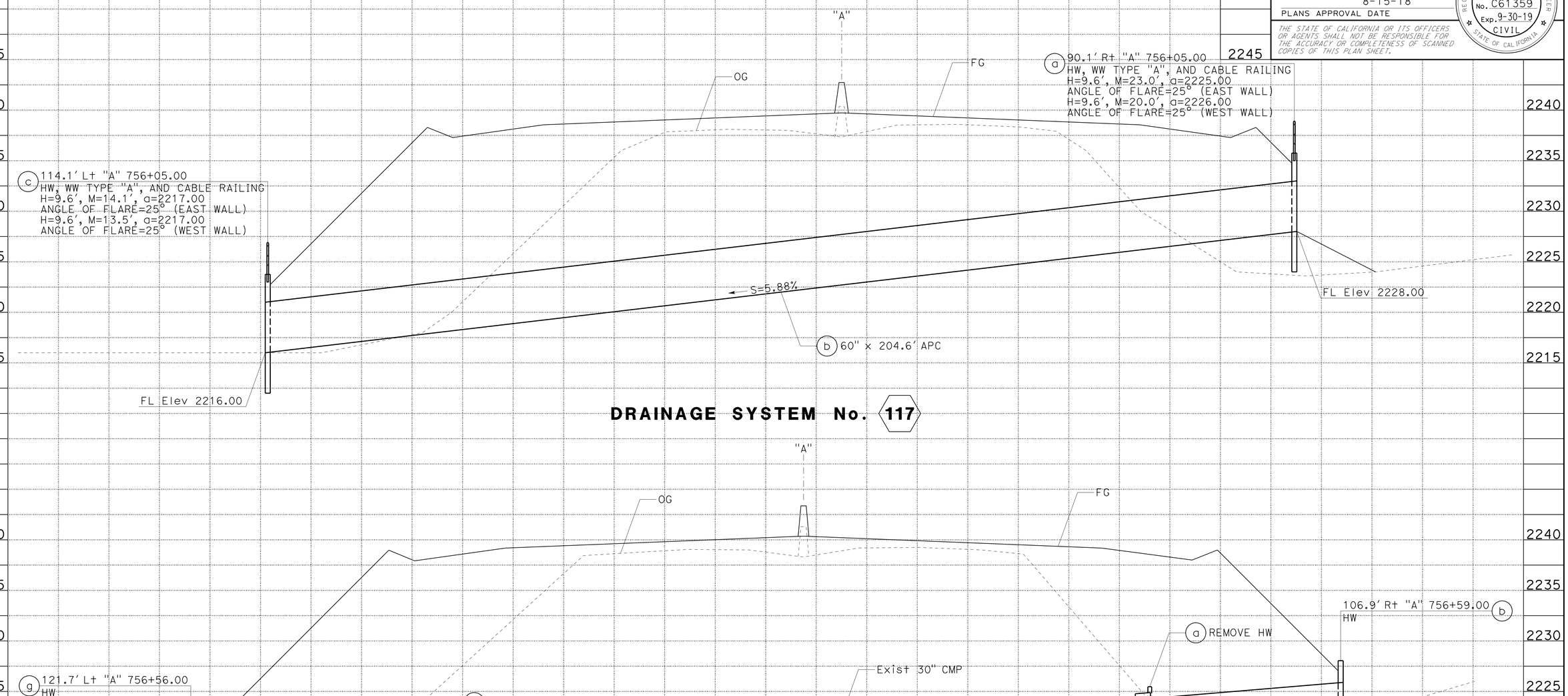

DRAINAGE SYSTEM No. 117

DRAINAGE SYSTEM No. 119

DRAINAGE PROFILES

SCALE: Horiz 1" = 10'
Vert 1" = 5'

DP-51

* SEE DRAINAGE DETAILS SHEETS.
** SEE CONSTRUCTION DETAILS SHEETS.

STATION		TOTAL
CY	Exc	
	Emb	

REVISED BY | DATE REVISED
HA VU | AHMAD SHAH
CALCULATED-DESIGNED BY | CHECKED BY
FUNCTIONAL SUPERVISOR | LARRY SARTORI

STATE OF CALIFORNIA - DEPARTMENT OF TRANSPORTATION
Caltrans
DESIGN

LAST REVISION | DATE PLOTTED => 05-SEP-2018
08-01-18 | TIME PLOTTED => 16:48

Dist	COUNTY	ROUTE	POST MILES TOTAL PROJECT	SHEET No.	TOTAL SHEETS
08	Riv	60	22.1/26.6	193	680

REGISTERED CIVIL ENGINEER 8-1-18 DATE

8-15-18
PLANS APPROVAL DATE

REGISTERED PROFESSIONAL ENGINEER HA VU No. C61359 Exp. 9-30-19 CIVIL STATE OF CALIFORNIA

THE STATE OF CALIFORNIA OR ITS OFFICERS OR AGENTS SHALL NOT BE RESPONSIBLE FOR THE ACCURACY OR COMPLETENESS OF SCANNED COPIES OF THIS PLAN SHEET.

NOTES:

1. "H" IS MEASURED FROM TOP OF BOTTOM SLAB TO THE NORMAL GUTTER GRADE LINE UNDEPRESSED AT THE CURB FACE.
2. FOR "T" WALL THICKNESS AND REINFORCEMENT, SEE TABLE A.
3. WALL REINFOREMENT MUST BE PLACED IN THE CENTER OF THE WALL THICKNESS WITH HORIZONTAL BARS PLACED ON THE EXTERIOR FACE. BOTTOM SLAB CONCRETE COVER MUST BE 3" CLEAR ON THE INTERIOR FACE UNLESS OTHERWISE NOTED. TOP SLAB CONCRETE COVER MUST BE 2" CLEAR ON THE EXTERIOR FACE UNLESS OTHERWISE NOTED. REINFORCEMENT SPACING IS IN INCHES UNLESS OTHERWISE NOTED.
4. STEPS - NONE REQUIRED WHERE "H" IS LESS THEN 2'-6". WHERE "H" IS 2'-6" OR MORE, INSTALL STEPS WITH LOWEST RUNG 1'-0" ABOVE THE FLOOR AND HIGHEST RUNG NOT MORE THAN 6" BELOW BOTTOM OF LID. THE DISTANCE BETWEEN STEPS MUST NOT EXCEED 1'-0" AND BE UNIFORM THROUGHOUT THE LENGTH OF THE WALL. PLACE STEPS IN THE WALL WITHOUT AN OPENING. STEP INSERTS MAY BE SUBSTITUTED FOR THE BAR STEPS. STEP INSERTS MUST COMPLY WITH STATE INDUSTRIAL SAFETY REQUIREMENTS. SEE REVISED STANDARD PLAN RSP D74 FOR STEP DETAILS.
5. PIPE(S) CAN BE PLACED IN ANY WALL. ADJACENT TO EACH SIDE OF THE OPENING, PLACE ADDITIONAL REINFORCEMENT EQUIVALENT TO HALF THE INTERUPTED MAIN REINFORCEMENT. FOR LARGER PIPES GREATER THAN OR EQUAL TO 42" DIAMETER, ALSO ADD 4 DIAGONAL BARS, 1 BAR EACH SIDE. BARS MUST BE THE SAME SIZE AS THE LARGER OF THE MAIN VERTICAL OR HORIZONTAL BARS. EXTEND BARS ONE DEVELOPMENT LENGTH PAST THE INTERSECTION WITH THE ADJACENT DIAGONAL BAR, OR WHERE BARS INTERSECT MID THICKNESS OF ADJACENT WALL BOTTOM OR TOP NON-CONTINUOUS WALL, BEND ENDS AS REQURIED INTO SAME PLANE.
6. SET INLET SO THAT GRATE BARS ARE PARALLEL TO DIRECTION OF PRINCIPAL SURFACE FLOW.
7. EXCEPT FOR INLETS USED AS JUNCTION BOXES, BASIN FLOOR MUST HAVE WOOD TROWEL FINISH AND A MINIMUM SLOPE OF 4:1, UNLESS OTHERWISE NOTED, FROM ALL DIRECTIONS TOWARD OUTLET PIPE BY CASTING GROUT FILL ON TOP OF THE BOTTOM SLAB. THE ADDITIONAL VOLUME TO ACHIEVE THE 4:1 SLOPE MAY ALSO BE ACHIEVED BY CASTING THE BOTTOM SLAB AND FILL AS A COMPOSITE CONCRETE ELEMENT.
8. DETAILS SHOWN APPLY TO METAL, CONCRETE AND PLASTIC PIPE(S).
9. THE CONTRACTOR MAY USE WWR INSTEAD OF BAR REINFORCEMENT. THE RATIO OF BAR REINFORCEMENT TO WWR SHALL BE BASED ON THE YLELD STRENGTH RATIO.
10. CAST-IN-PLACE INLETS TO BE FORM AROUND ALL PIPES/STUBS INTERSECTING THE INLET, AND CONCRETE POURED IN ONE CONTINUOUS OPERATION.
11. PERIMETER REINFORCEMENT MUST NOT BE SMALLER THAN MAIN BARS AND #4 AND SERVES AS A RIGID FRAME TO POSITION AND ATTACH THE REQUIRED STRUCTURAL REINFORCEMENT AND MAY BE TACK WELDED AT OUTER CORNERS WHEN USING ASTM A706 WELDABLE BARS.
12. COMPLETE JOINT PENETRATION BUTT WELDS MAY BE SUBSTITUTED FOR THE FILLET WELDS ON ALL ANCHORS.
13. STANDARD SQUARE, HEXAGON, ROUND OR EQUIVALENT HEADED ANCHORS MAY BE SUBSTITUTED FOR THE RIGHT ANGLE HOOKS ON THE ANCHORS SHOWN ON THIS PLAN.
14. SEE REVISED STANDARD PLAN REVISED D72F FOR DESIGN NOTES AND ADDITIONAL DETAILS.
15. SEE STANDARD PLAN D77A FOR GRATE DETAILS.

TABLE A - WALL REINFORCEMENT

H<=8' (T=6", UON)		8'<H<=20' (T=11", UON)	
HORIZ	VERTICAL	HORIZ	VERTICAL
#4 @ 6	#4 @ 6	#5 @ 4	#6 @ 4

SOIL PRESSURE BELOW SLAB (ksf)

H<=8'	8'<H<=20'
2.90	5.90

MISCELLANEOUS IRON & STEEL

INLET TYPE	No. OF GRATES	GRATE TYPE	WEIGHT (LB)
Mod G1	2	24-12	634

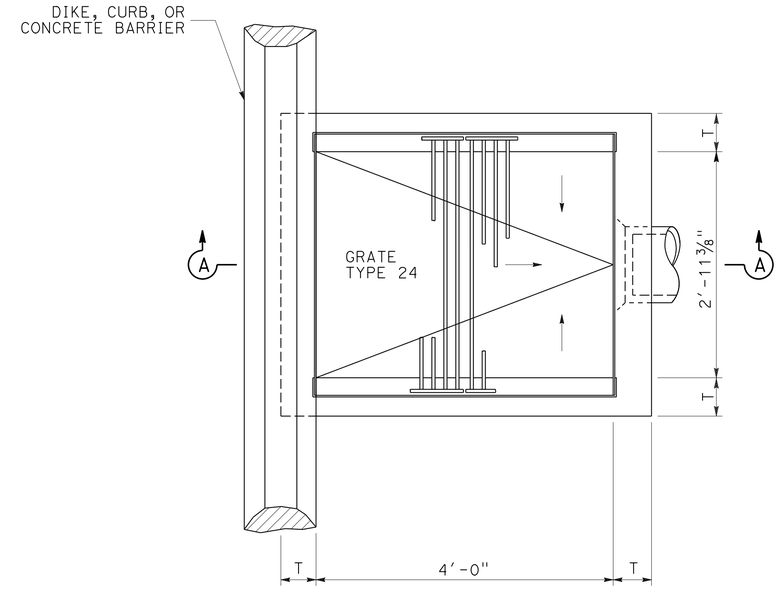

PLAN

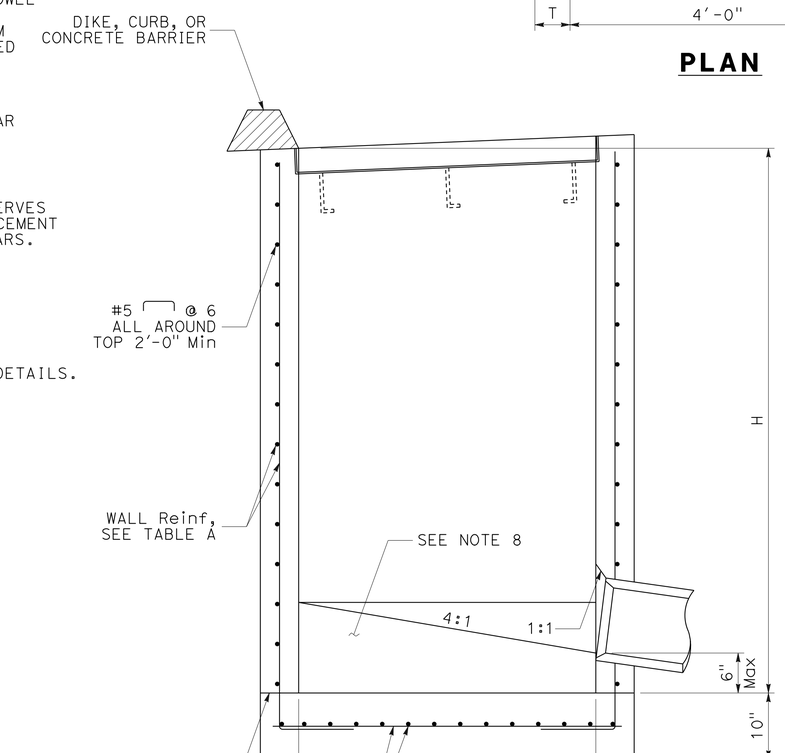

SECTION A-A

Mod G1 INLET

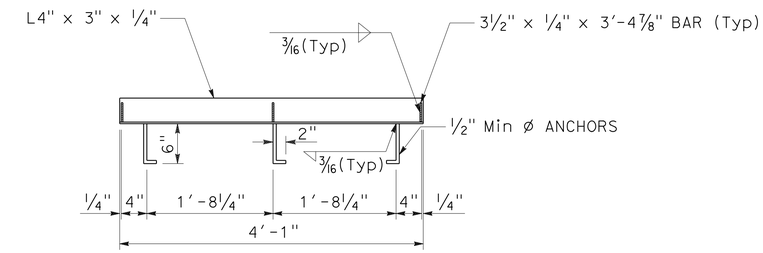

FRAME ANCHOR PLACEMENT

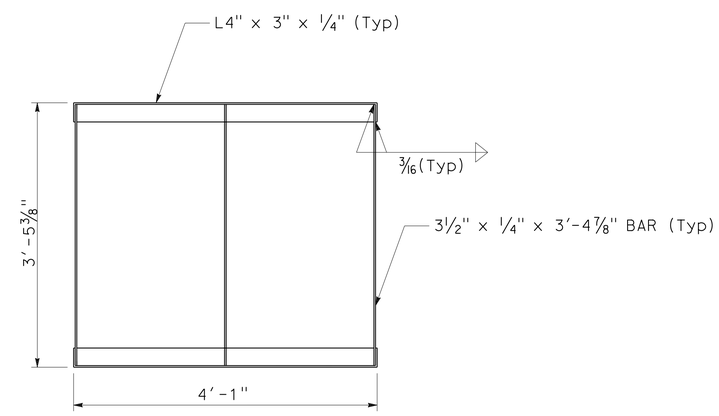

GRATE FRAME

DRAINAGE DETAILS

NO SCALE

DD-1

STATE OF CALIFORNIA - DEPARTMENT OF TRANSPORTATION
Caltrans® DESIGN
FUNCTIONAL SUPERVISOR LARRY SARTORI
CALCULATED-DESIGNED BY HA VU
CHECKED BY AHMAD SHAH
REVISED BY
DATE REVISED

LAST REVISION 08-01-18 | DATE PLOTTED => 05-SEP-2018 | TIME PLOTTED => 16:48

Dist	COUNTY	ROUTE	POST MILES TOTAL PROJECT	SHEET No.	TOTAL SHEETS
08	Riv	60	22.1/26.6	194	680

REGISTERED CIVIL ENGINEER 8-1-18 DATE

8-15-18
PLANS APPROVAL DATE

REGISTERED PROFESSIONAL ENGINEER HA VU No. C61359 Exp. 9-30-19 CIVIL STATE OF CALIFORNIA

THE STATE OF CALIFORNIA OR ITS OFFICERS OR AGENTS SHALL NOT BE RESPONSIBLE FOR THE ACCURACY OR COMPLETENESS OF SCANNED COPIES OF THIS PLAN SHEET.

NOTES:

1. THE OUTSIDE DIAMETER OF THE INLET PIPE SHALL NOT EXCEED ONE-HALF THE INSIDE DIAMETER OF THE MAIN LINE.
2. THE INLET PIPE SHALL ENTER THE MAIN LINE RADIALLY.
3. THE SIZE OF THE OPENING INTO THE MAIN LINE SHALL BE THE OUTSIDE DIAMETER OF THE INLET PIPE PLUS 1" MINIMUM TO 3" MAXIMUM.

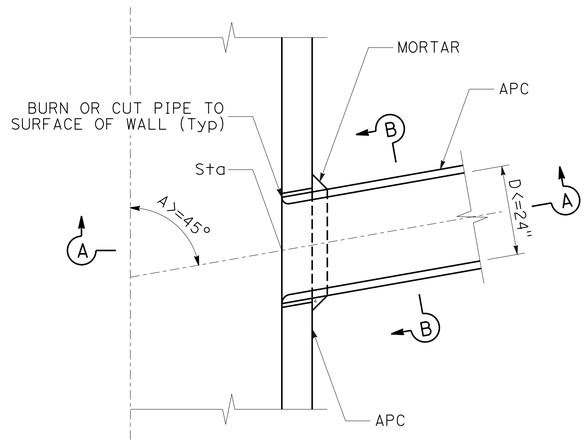

PLAN

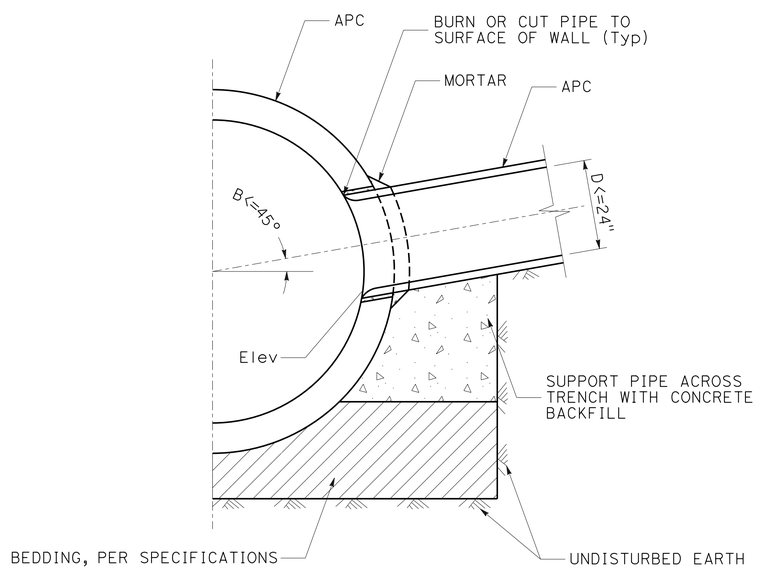

SECTION A-A

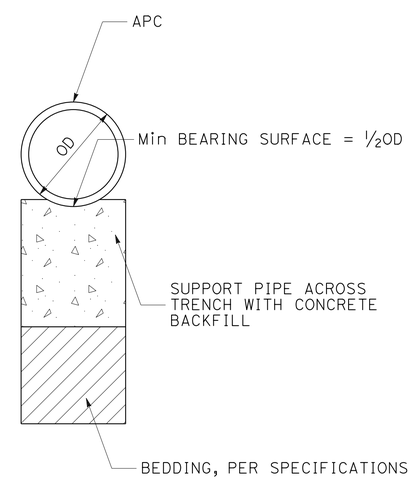

SECTION B-B

JUNCTION STRUCTURE-PIPE TO PIPE

DRAINAGE DETAILS
NO SCALE
DD-2

STATE OF CALIFORNIA - DEPARTMENT OF TRANSPORTATION
Caltrans®
DESIGN
FUNCTIONAL SUPERVISOR: LARRY SARTORI
CALCULATED-DESIGNED BY: HA VU
CHECKED BY: AHMAD SHAH
REVISED BY
DATE REVISED

LAST REVISION 08-01-18
DATE PLOTTED => 05-SEP-2018
TIME PLOTTED => 16:48

Dist	COUNTY	ROUTE	POST MILES TOTAL PROJECT	SHEET No.	TOTAL SHEETS
08	Riv	60	22.1/26.6	195	680

REGISTERED CIVIL ENGINEER 8-1-18 DATE

8-15-18
PLANS APPROVAL DATE

REGISTERED PROFESSIONAL ENGINEER HA VU No. C61359 Exp. 9-30-19 CIVIL STATE OF CALIFORNIA

THE STATE OF CALIFORNIA OR ITS OFFICERS OR AGENTS SHALL NOT BE RESPONSIBLE FOR THE ACCURACY OR COMPLETENESS OF SCANNED COPIES OF THIS PLAN SHEET.

D	L	T
12"	12"	4"
18"	12"	5"
24"	12"	6"
30"	18"	7"
36"	18"	9"
42"	18"	9"
48"	18"	10"
54"	18"	10"
60"	21"	11"

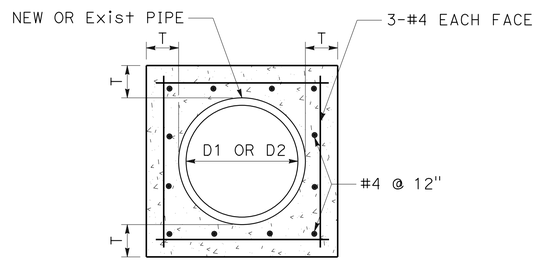

SECTION A-A

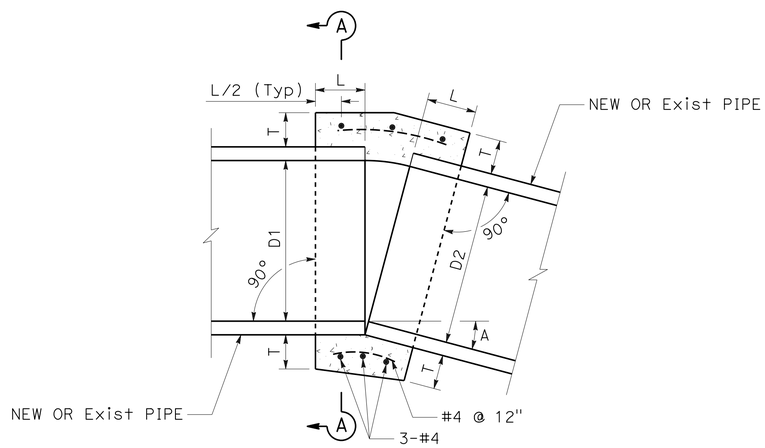

PLAN

NOTES:

1. CONCRETE COLLAR IS REQUIRED WHERE THE CHANGE IN GRADE EXCEEDS 10%.
2. WHERE PIPES OF DIFFERENT DIAMETERS ARE JOINED WITH A CONCRETE COLLAR, "L" AND "T" SHALL BE THOSE OF THE LARGER PIPE.
3. FOR PIPE SIZE NOT LISTED USE NEXT SIZE LARGER.
4. OMIT REINFORCING FOR PIPES 24" AND LESS IN DIAMETER ON ALL PIPES WHERE ANGLE "A" IS LESS THAN 10°.
5. ALL STEEL SHALL TERMINATE 1½" CLEAR OF CONCRETE SURFACE UNLESS OTHERWISE SHOWN.

CONCRETE COLLAR

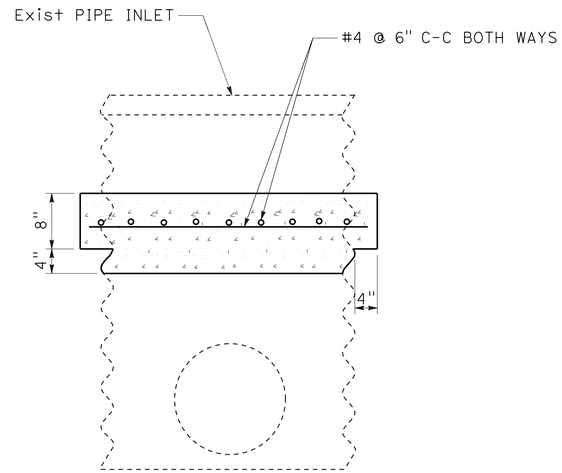

CAP PIPE INLET

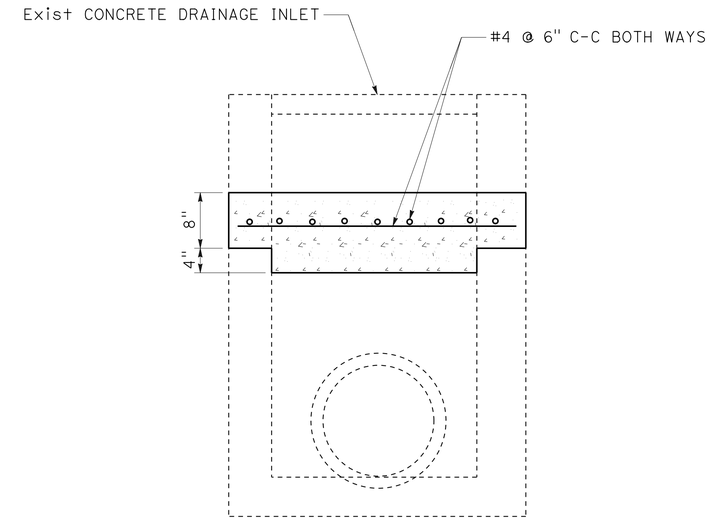

CAP CONCRETE DRAINAGE INLET

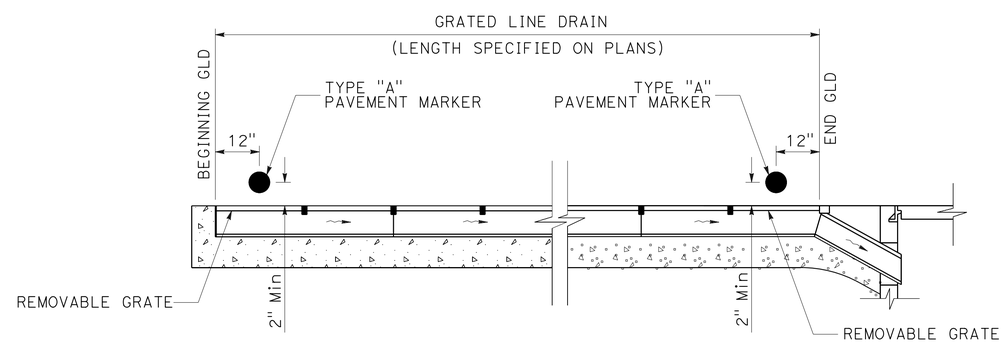

NOTES:

1. ATTACH PAVEMENT MARKER TO BARRIER OR DIKE.
2. PROVIDE REMOVABLE GRATE AND TYPE "A" PAVEMENT MARKER EVERY 25'.
3. FOR DETAILS NOT SHOWN, SEE STANDARD PLAN D98C.

GRATED LINE DRAIN

DRAINAGE DETAILS

NO SCALE

DD-3

STATE OF CALIFORNIA - DEPARTMENT OF TRANSPORTATION
Caltrans® DESIGN

FUNCTIONAL SUPERVISOR: LARRY SARTORI
CALCULATED-DESIGNED BY: HA VU
CHECKED BY: AHMAD SHAH
REVISED BY
DATE REVISED

LAST REVISION 08-01-18
DATE PLOTTED => 05-SEP-2018
TIME PLOTTED => 16:48

Dist	COUNTY	ROUTE	POST MILES TOTAL PROJECT	SHEET No.	TOTAL SHEETS
08	Riv	60	22.1/26.6	196	680

REGISTERED CIVIL ENGINEER 8-1-18 DATE

8-15-18
PLANS APPROVAL DATE

REGISTERED PROFESSIONAL ENGINEER HA VU No. C61359 Exp. 9-30-19 CIVIL STATE OF CALIFORNIA

THE STATE OF CALIFORNIA OR ITS OFFICERS OR AGENTS SHALL NOT BE RESPONSIBLE FOR THE ACCURACY OR COMPLETENESS OF SCANNED COPIES OF THIS PLAN SHEET.

NOTES:

1. ALL WIRE MESH SHALL TERMINATE 2" CLEAR OF CONCRETE SURFACE UNLESS OTHERWISE SHOWN.
2. TRANSVERSE EXPANSION JOINTS SHALL BE PROVIDED EVERY 20'.

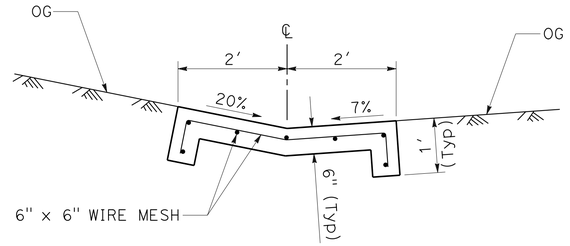

SECTION A-A

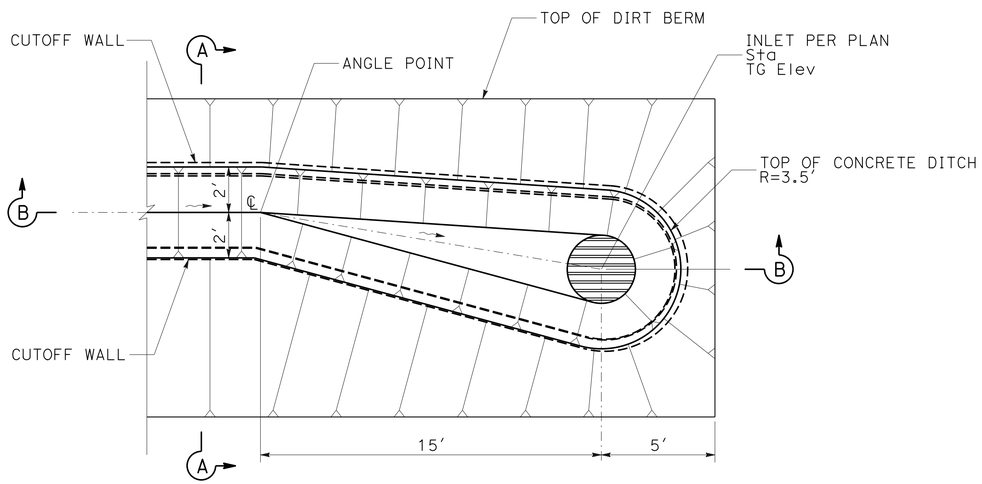

PLAN

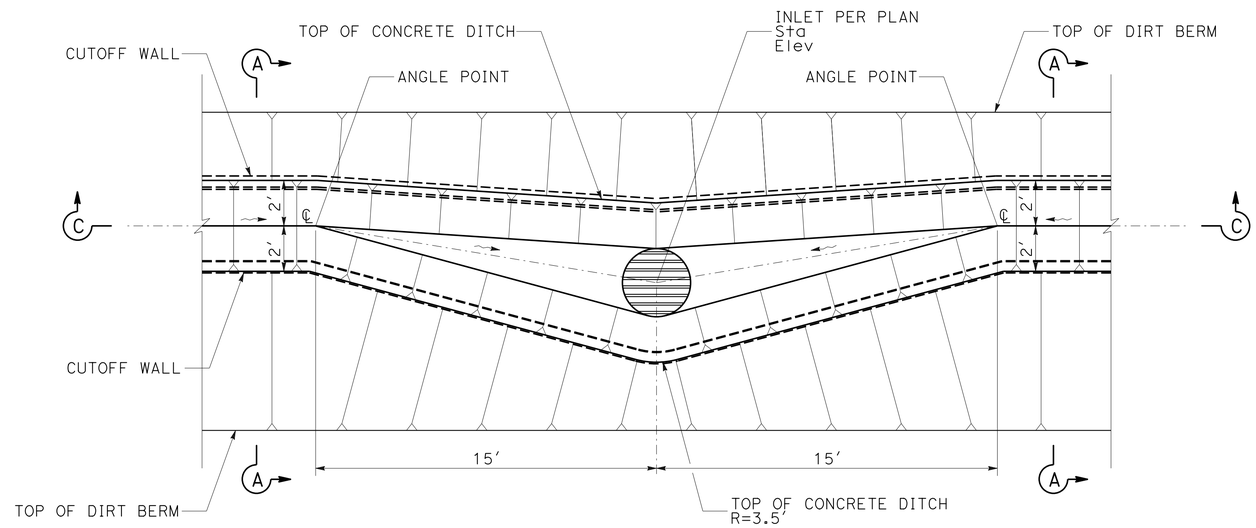

PLAN

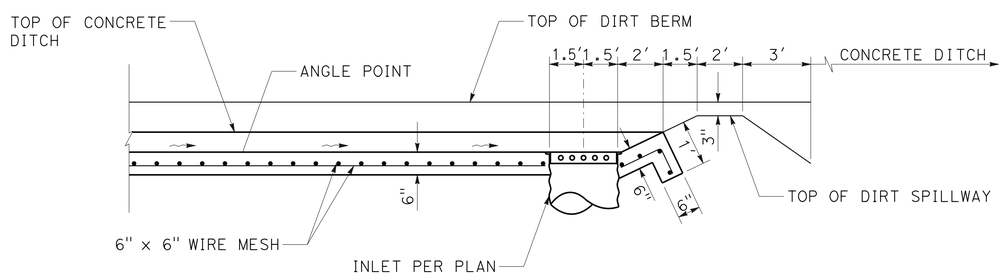

SECTION B-B

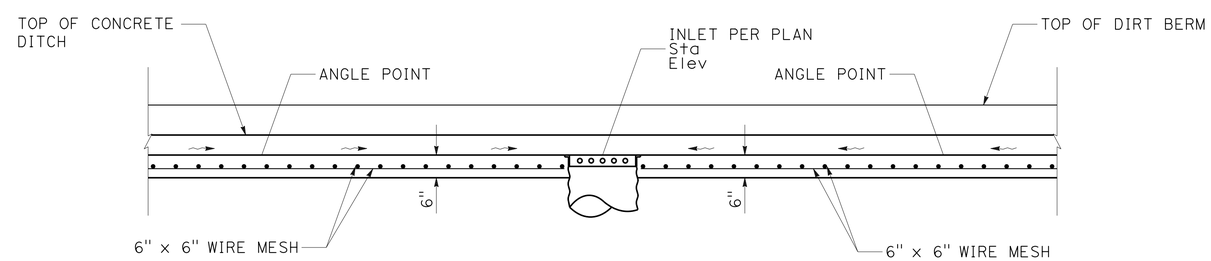

SECTION C-C

PCC INLET APRON - CASE 1

DRAINAGE DETAILS

NO SCALE

DD-4

STATE OF CALIFORNIA - DEPARTMENT OF TRANSPORTATION
Caltrans® DESIGN

FUNCTIONAL SUPERVISOR: LARRY SARTORI
CALCULATED-DESIGNED BY: HA VU
CHECKED BY: AHMAD SHAH
REVISED BY
DATE REVISED

LAST REVISION 08-01-18
DATE PLOTTED => 05-SEP-2018
TIME PLOTTED => 16:48

Dist	COUNTY	ROUTE	POST MILES TOTAL PROJECT	SHEET No.	TOTAL SHEETS
08	Riv	60	22.1/26.6	197	680

REGISTERED CIVIL ENGINEER 8-1-18 DATE

8-15-18
PLANS APPROVAL DATE

REGISTERED PROFESSIONAL ENGINEER HA VU No. C61359 Exp. 9-30-19 CIVIL STATE OF CALIFORNIA

THE STATE OF CALIFORNIA OR ITS OFFICERS OR AGENTS SHALL NOT BE RESPONSIBLE FOR THE ACCURACY OR COMPLETENESS OF SCANNED COPIES OF THIS PLAN SHEET.

NOTES:

1. ALL WIRE MESH SHALL TERMINATE 2" CLEAR OF CONCRETE SURFACE UNLESS OTHERWISE SHOWN.
2. TRANSVERSE EXPANSION JOINTS SHALL BE PROVIDED EVERY 20'.

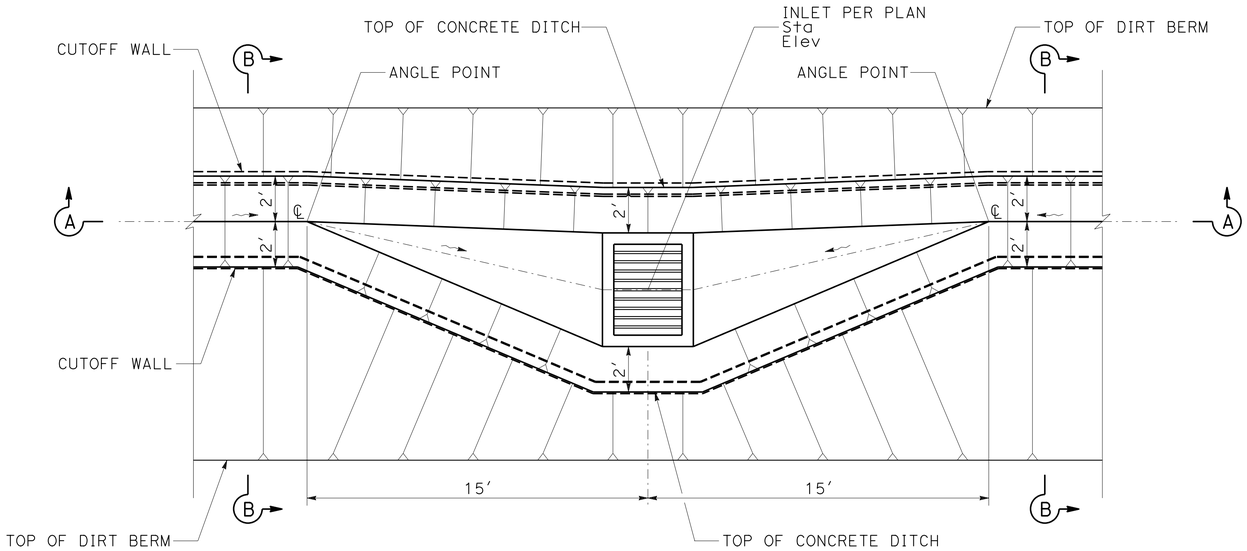

PLAN

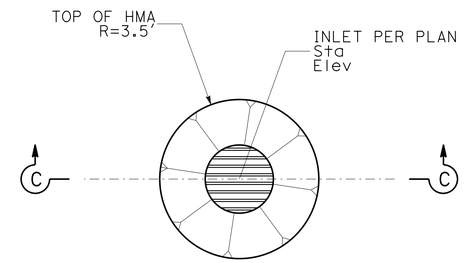

PLAN

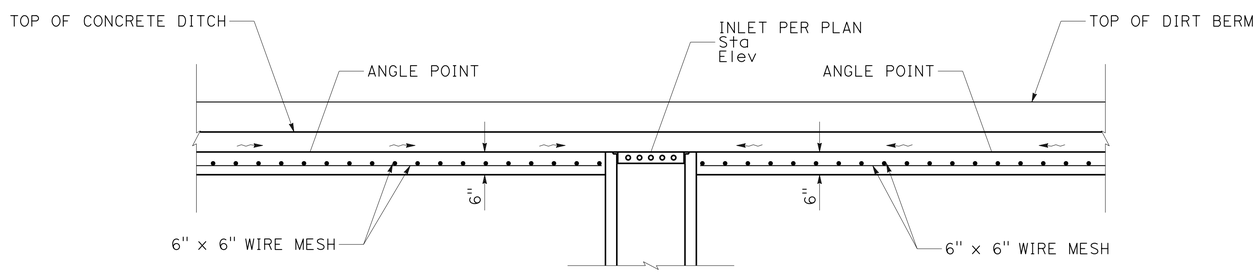

SECTION A-A

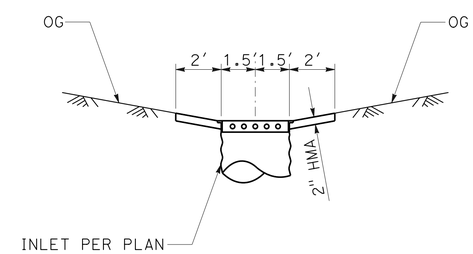

SECTION C-C

HMA INLET APRON

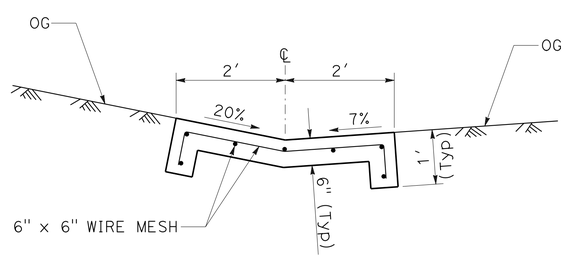

SECTION B-B

PCC INLET APRON - CASE 2

DRAINAGE DETAILS

NO SCALE

DD-5

STATE OF CALIFORNIA - DEPARTMENT OF TRANSPORTATION
Caltrans®
DESIGN

FUNCTIONAL SUPERVISOR: LARRY SARTORI
CALCULATED-DESIGNED BY: HA VU
CHECKED BY: AHMAD SHAH
REVISED BY
DATE REVISED

LAST REVISION 08-01-18
DATE PLOTTED => 05-SEP-2018
TIME PLOTTED => 16:48

Dist	COUNTY	ROUTE	POST MILES TOTAL PROJECT	SHEET No.	TOTAL SHEETS
08	Riv	60	22.1/26.6	198	680

REGISTERED CIVIL ENGINEER 8-1-18 DATE

8-15-18
PLANS APPROVAL DATE

REGISTERED PROFESSIONAL ENGINEER HA VU No. C61359 Exp. 9-30-19 CIVIL STATE OF CALIFORNIA

THE STATE OF CALIFORNIA OR ITS OFFICERS OR AGENTS SHALL NOT BE RESPONSIBLE FOR THE ACCURACY OR COMPLETENESS OF SCANNED COPIES OF THIS PLAN SHEET.

NOTES:

1. FOR AFES DIMENSIONS, SEE STANDARD PLANS D94A AND D94B.
2. SQUARED-OFF EXCAVATION NOT REQUIRED.

LEGEND:

D - DIAMETER OF PIPE
W - GRATEST OUTSIDE WIDTH OF FLARED END SECTION
L - LENGHT OF FLARED END SECTION

CLASS OF RSP	Z (TRENCH DEPTH)
II	1.8′
III	1.8′

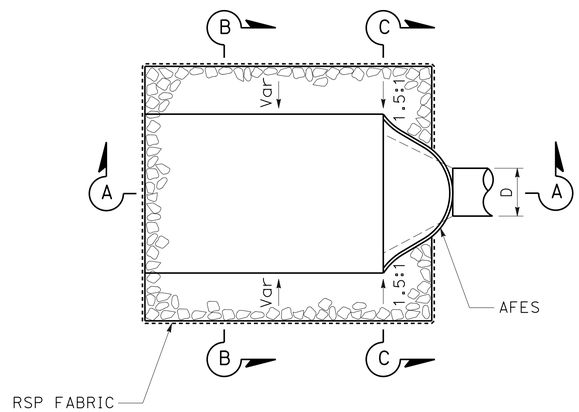

PLAN

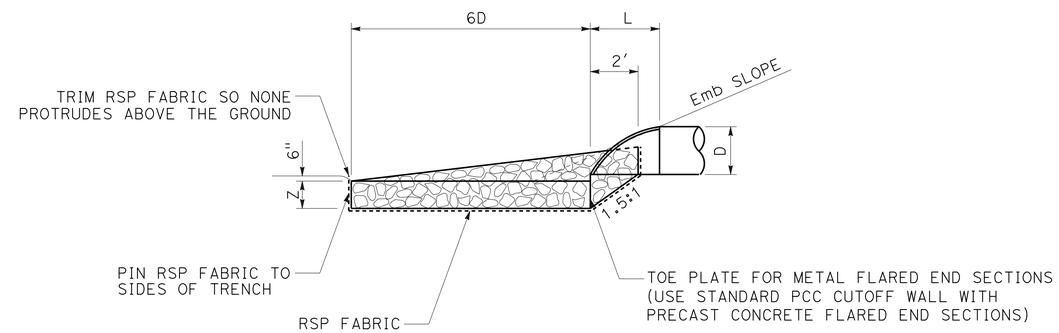

SECTION A-A

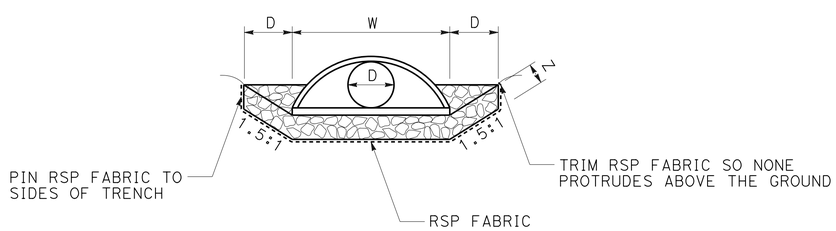

SECTION C-C

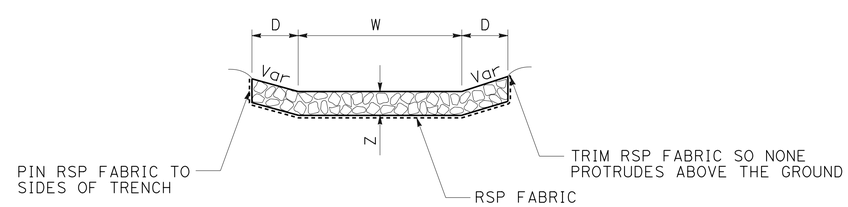

SECTION B-B

ROCK SLOPE PROTECTION FOR FLARED END SECTIONS

DRAINAGE DETAILS

NO SCALE

DD-6

STATE OF CALIFORNIA - DEPARTMENT OF TRANSPORTATION
Caltrans® DESIGN
FUNCTIONAL SUPERVISOR: LARRY SARTORI
CALCULATED-DESIGNED BY: HA VU
CHECKED BY: AHMAD SHAH
REVISED BY
DATE REVISED

LAST REVISION 08-01-18
DATE PLOTTED => 05-SEP-2018
TIME PLOTTED => 16:48

Dist	COUNTY	ROUTE	POST MILES TOTAL PROJECT	SHEET No.	TOTAL SHEETS
08	Riv	60	22.1/26.6	199	680

REGISTERED CIVIL ENGINEER 8-1-18 DATE

8-15-18
PLANS APPROVAL DATE

REGISTERED PROFESSIONAL ENGINEER HA VU No. C61359 Exp. 9-30-19 CIVIL STATE OF CALIFORNIA

THE STATE OF CALIFORNIA OR ITS OFFICERS OR AGENTS SHALL NOT BE RESPONSIBLE FOR THE ACCURACY OR COMPLETENESS OF SCANNED COPIES OF THIS PLAN SHEET.

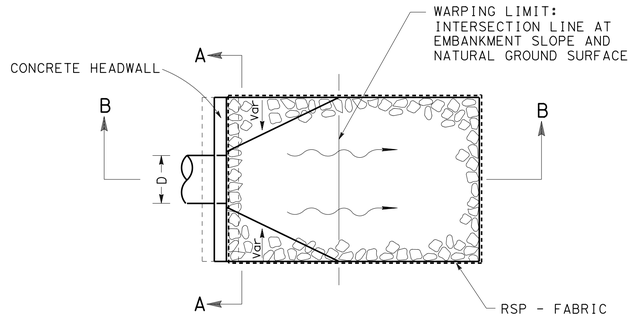

PLAN VIEW

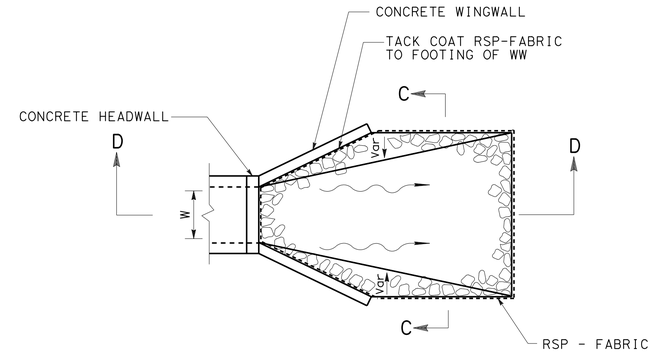

PLAN VIEW

CLASS OF RSP	Z (TRENCH DEPTH)
II	1.8′
III	1.8′
IV	2.5′
V	3.3′
VII	4.3′
VIII	5.4′

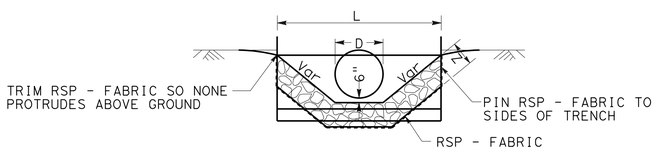

SECTION A-A

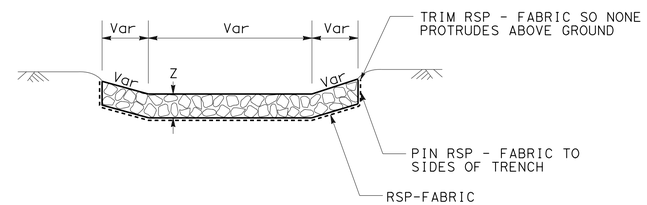

SECTION C-C

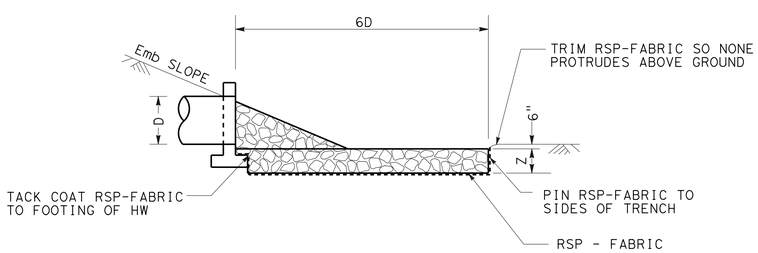

SECTION B-B

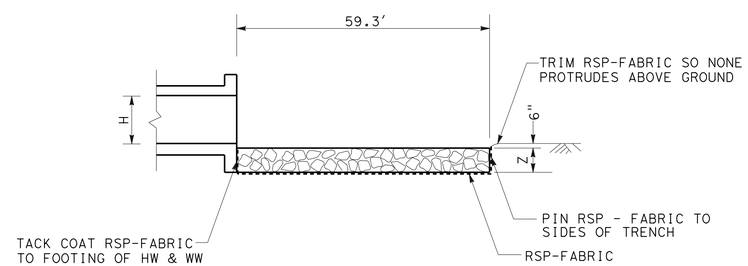

SECTION D-D

ROCK SLOPE PROTECTION AT PIPE OUTLETS

ROCK SLOPE PROTECTION AT RCB OUTLET

DRAINAGE DETAILS

NO SCALE

DD-7

STATE OF CALIFORNIA - DEPARTMENT OF TRANSPORTATION
Caltrans®
DESIGN

FUNCTIONAL SUPERVISOR: LARRY SARTORI
CALCULATED-DESIGNED BY: HA VU
CHECKED BY: AHMAD SHAH
REVISED BY
DATE REVISED

LAST REVISION 08-01-18
DATE PLOTTED => 05-SEP-2018
TIME PLOTTED => 16:48

Dist	COUNTY	ROUTE	POST MILES TOTAL PROJECT	SHEET No.	TOTAL SHEETS
08	Riv	60	22.1/26.6	200	680

REGISTERED CIVIL ENGINEER 8-1-18 DATE

8-15-18
PLANS APPROVAL DATE

REGISTERED PROFESSIONAL ENGINEER HA VU No. C61359 Exp. 9-30-19 CIVIL STATE OF CALIFORNIA

THE STATE OF CALIFORNIA OR ITS OFFICERS OR AGENTS SHALL NOT BE RESPONSIBLE FOR THE ACCURACY OR COMPLETENESS OF SCANNED COPIES OF THIS PLAN SHEET.

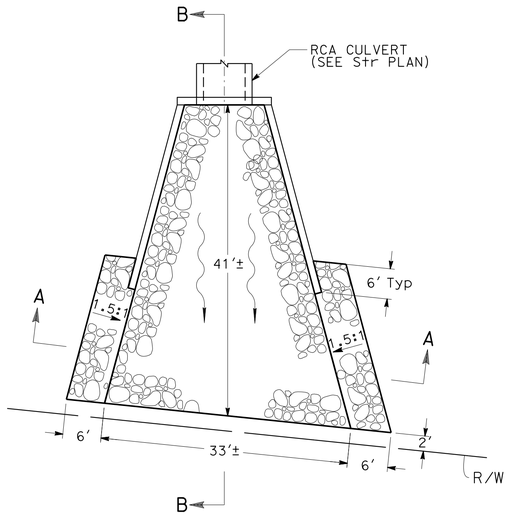

PLAN VIEW

10

STATION 551+50

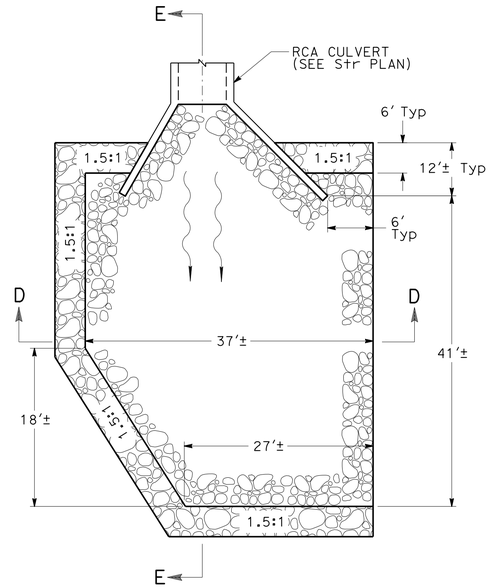

PLAN VIEW

23

STATION 580+20

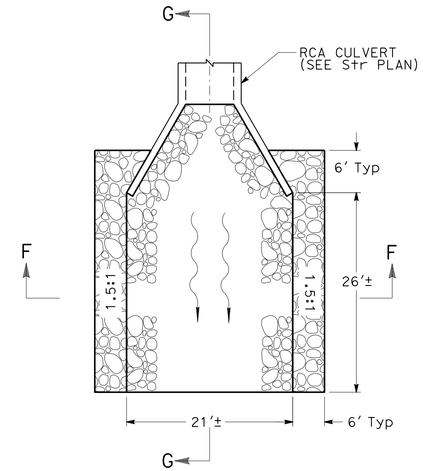

PLAN VIEW

32

STATION 600+38

DRAINAGE SYSTEM	CLASS OF RSP LAYER		MINIMUM THICKNESS	METHOD OF PLACEMENT	CLASS OF RSP-FABRIC
	OUTSIDE	BACKING			
10	V		3.3'	B	8
		II	1.8'	B	
23	V		3.3'	B	8
		II	1.8'	B	
32	V		3.3'	B	8
		II	1.8'	B	

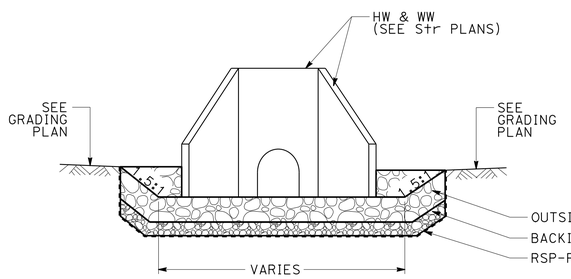

SECTION A-A

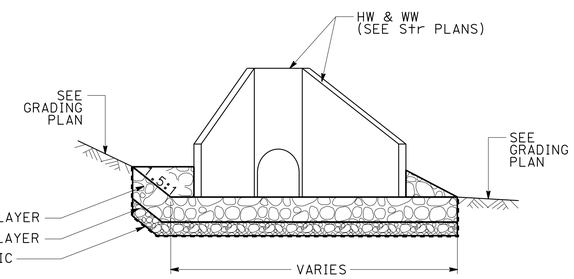

SECTION D-D

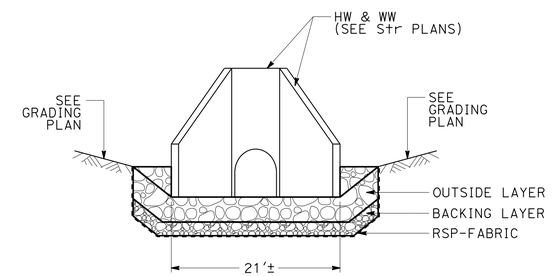

SECTION F-F

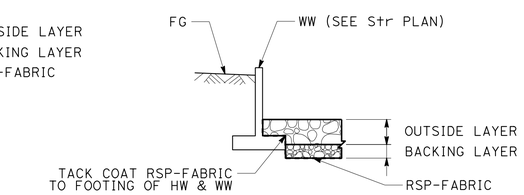

SECTION C-C

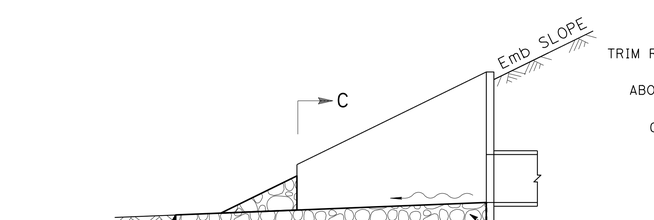

SECTION B-B

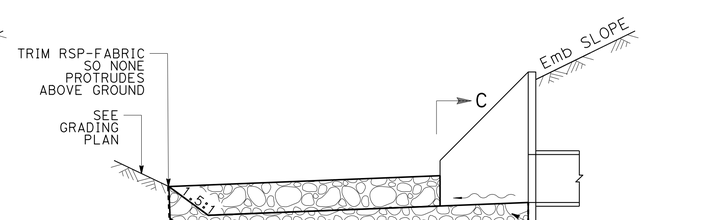

SECTION E-E

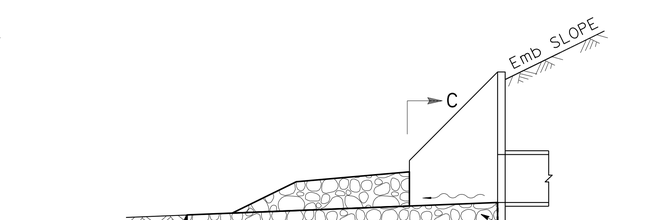

SECTION G-G

10 23 32

DRAINAGE DETAILS

NO SCALE

DD-8

STATE OF CALIFORNIA - DEPARTMENT OF TRANSPORTATION

DESIGN

FUNCTIONAL SUPERVISOR: LARRY SARTORI

CALCULATED-DESIGNED BY: HA VU

CHECKED BY: AHMAD SHAH

REVISED BY

DATE REVISED

LAST REVISION 08-01-18

DATE PLOTTED => 05-SEP-2018

TIME PLOTTED => 16:48